Dependent Sources

OUTLINE Lecture 7, 9/14/05

- Definitions
- Node Analysis with dependent sources
- Mesh Analysis with dependent sources

Reading

Chapter 2.4-2.5 revisited

Circuit w/ Dependent Source Example

Find i_2, i_1 and i_o

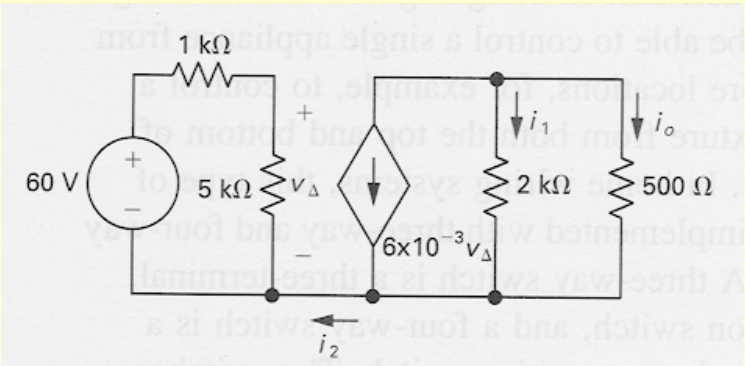

Now we will do this class of circuits directly.

Ideal Voltage Source

- Circuit element that maintains a prescribed voltage across its terminals, **regardless of the current flowing in those terminals**.
  - Voltage is known, but current is determined by the circuit to which the source is connected.
- The voltage can be either **independent** or **dependent** on a voltage or current elsewhere in the circuit, and can be constant or time-varying.

Device symbols:

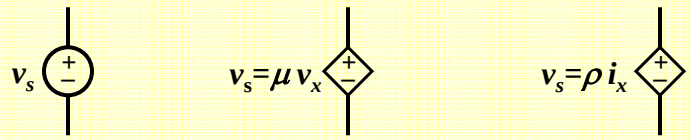

independent **voltage-controlled** **current-controlled**

Ideal Current Source

- Circuit element that maintains a prescribed current through its terminals, **regardless of the voltage across those terminals**.
  - Current is known, but voltage is determined by the circuit to which the source is connected.
- The current can be either **independent or dependent** on a voltage or current elsewhere in the circuit, and can be constant or time-varying.

Device symbols:

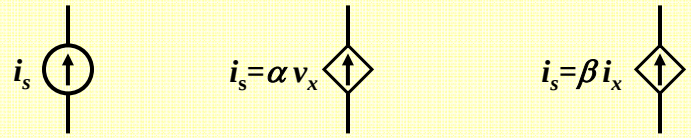

independent **voltage-controlled** **current-controlled**

Node-Voltage Method and Dependent Sources

- If a circuit contains dependent sources, what to do?

Example:

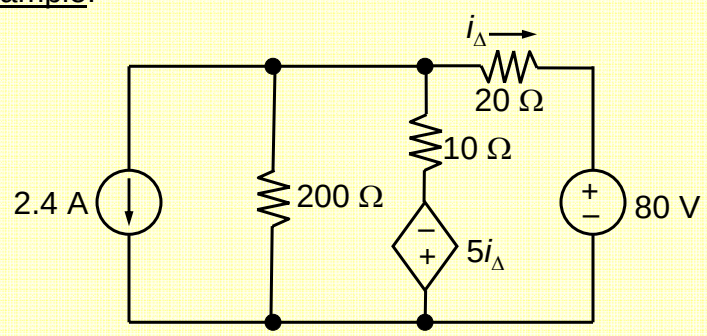

Node-Voltage Method and Dependent Sources

- Dependent current source: treat as independent current source in organizing and writing node eqns, but include (substitute) constraining dependency in terms of defined node voltages.
- Dependent voltage source: treat as independent voltage source in organizing and writing node eqns, but include (substitute) constraining dependency in terms of defined node voltages.

Example:

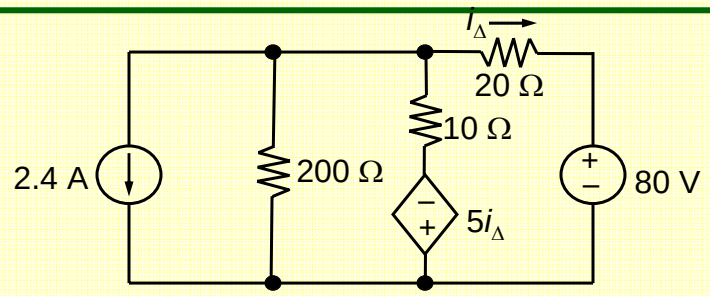

Mesh Analysis with Dependent Sources

- Exactly analogous to Node Analysis
- Dependent Voltage Source: (1) Formulate and write KVL mesh eqns. (2) Include and express dependency constraint in terms of mesh currents
- Dependent Current Source: (1) Use supermesh. (2) Include and express dependency constraint in terms of mesh currents

Comments on Dependent Sources

A dependent source establishes a voltage or current whose value depends on the value of a voltage or current at a specified location in the circuit.

(device model, used to model behavior of transistors & amplifiers)

To specify a dependent source, we must identify:

1. the controlling voltage or current (must be calculated, in general)
2. the relationship between the controlling voltage or current and the supplied voltage or current
3. the reference direction for the supplied voltage or current

The relationship between the dependent source and its reference cannot be broken!

– Dependent sources cannot be turned off for various purposes (*e.g.* to find the Thévenin resistance, or in analysis using Superposition).

Circuit w/ Dependent Source Example

Find i_2, i_1 and i_o

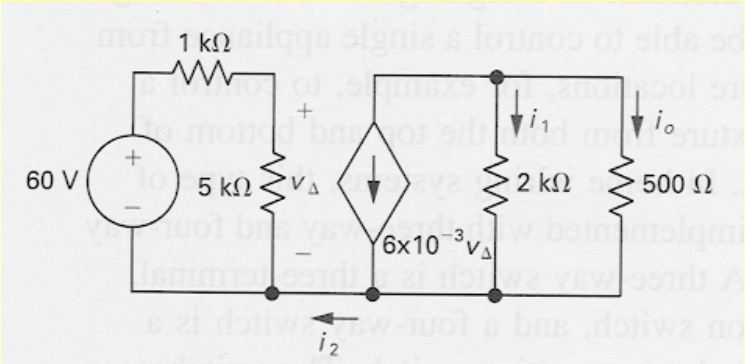

Thevenin w/ Dependent Source Example

Find R_{IN} and R_{OUT}

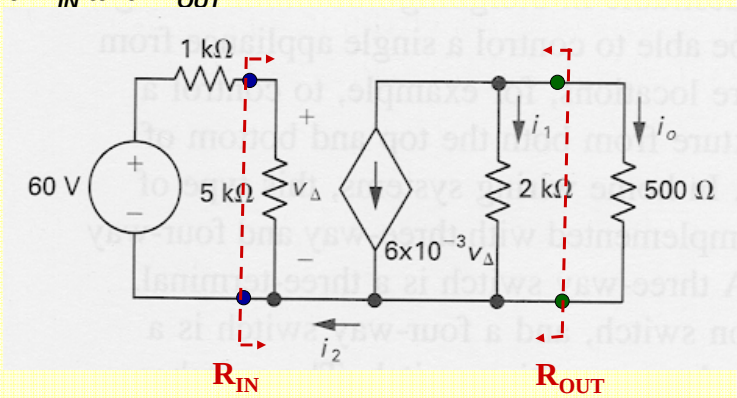

$R_{IN} = 5k\Omega$

Set 60V to Zero

V_{DELTA} Goes to zero

$R_{OUT} = 2k\Omega$

Thevenin w/ Dependent Source Example

Find V_{TH}

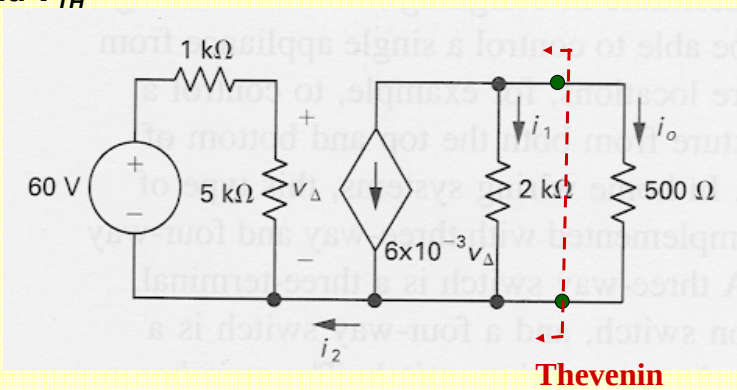

Remove 500 Ω load

$V_{OUT} = 50V \times 6\times10^{-3} \times 2k\Omega$

$V_{OUT} = 600V = V_{TH}$

$R_{TH} = R_{OUT}$
From previous analysis