EE 40 – Introduction to Microelectronic Circuits

Fall 2005, Prof. A. R. Neureuther
Dept. EECS, 509 Cory neureuth@eecs.berkeley.edu, 642-4590
UC Berkeley Office Hours: M1, W 3, F10
Course Web Site http://www-inst.eecs.berkeley.edu/~ee40/

Problem Set # 5

Due: 5 PM Tuesday, Oct. 4th, 2005 in 240 Cory

Announcements: There will be a quiz Wednesday, Sep. 28th in class to simulate the midterm, and a midterm on Wednesday, Oct. 5th.
Reading: Hambley 3rd Ed. Sections 2.6, 3.1-3.7, 4.1-4.3

4.1 Thevenin Equivalents and Load Line Analysis

a) For the following circuit, use Thevenin analysis to determine an equivalent circuit representation between nodes + and -. Assume all resistors are 1kΩ and the current source pushes 10mA. Note the resistive network is infinitely long.

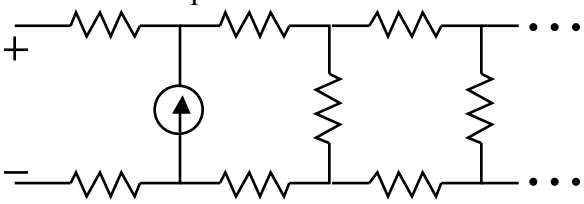

b) If the circuit is connected to a device with the following IV characteristic [refer below to IV(diode)], what is the approximate operating point of the device? Specify current I_{out} and voltage V_{out}.

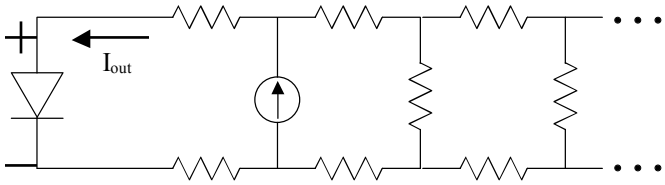

c) Suppose you replace the leftmost resistor on the upper side with the element X1, which exhibits the following IV graph (Assume - → + orientation, current is current going leftward). Determine the operating point of the nonlinear element.

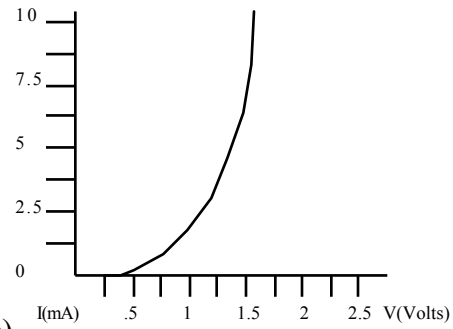

IV(diode)

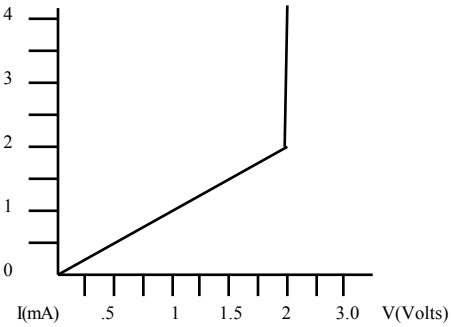

IV(X1)

4.2 Capacitors

Suppose you have the following circuit:

a) If, for infinite time before t = 0, switch 1 is closed and switch 2 is open, and they both change positions at t = 0, determine the value of $V_{C2}(t)$ for t > 0.
b) Determine the initial energy stored in the capacitive network, and the final energy stored (Determine $E_{01} + E_{02}$, and find $E_{f1} + E_{f2}$).
c) Where did the rest of the energy go? What happens if you double the value of the resistors? Which of your earlier answers would change? Provide an intuitive explanation for your result.

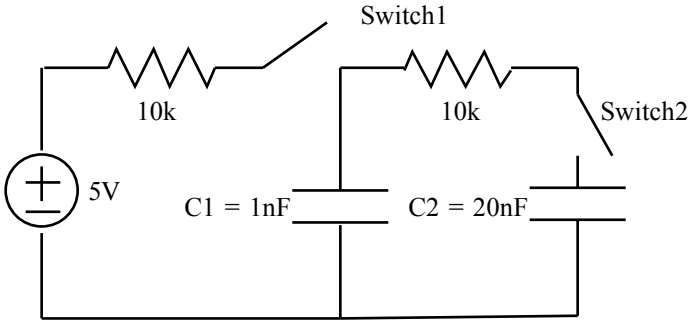

4.3 Transient Analysis

a) If switch 1 has been open for an infinitely long time before t = 0, and closes at t = 0 while switch 2 is closed before t = 0 and opens when 1 closes, what is the voltage across the capacitor $V_C(t)$ for the following input signal:
b) Close switch 2 and open switch 1. Suppose the 10V source is replaced by a square wave generator, V_{pp} = 1V and frequency f = 100Hz, DC offset = 0.5V. Provide a steady-state description of voltage $V_C(t)$ over one period of variation. Assume the source starts high and goes low after half a period. If you can generate a solvable system of equations that is sufficient, you do not have to solve. Hint: The steady state solution for $V_C(t)$ over a period will not be differentiable, but will be continuous and piecewise differentiable.
c) It is a requirement that the voltage $V_C(t)$ be continuous. Provide an intuitive explanation.