EE 40, Fall 2005
Homework 1 Solutions

1.1 Digital Basics

a) Convert the decimal number 71 to binary, hexadecimal, and base 3.
Using a process of successive divisions by the target base, taking the remainder as the least significant digit yet to be determined and repeating the process with the quotient, we obtain:

1) Binary representation of 71_{10}
   i. 71 / 2 = 35 R 1
   ii. 35 / 2 = 17 R 1
   iii. 17 / 2 = 8 R 1
   iv. 8 / 2 = 4 R 0
   v. 4 / 2 = 2 R 0
   vi. 2 / 2 = 1 R 0
   vii. 1 / 2 = 0 R 1

   The end result is that $71_{10} = 1000111_2$
2) Hexadecimal representation of 71_{10}
   i. 71 / 16 = 4 R 7
   ii. 4 / 16 = 0 R 4

   The end result is that $71_{10} = 47_{16}$
3) Base 3 representation of 71_{10}
   i. 71 / 3 = 23 R 2
   ii. 23 / 3 = 7 R 2
   iii. 7 / 3 = 2 R 1
   iv. 2 / 3 = 0 R 2

   The end result is that $71_{10} = 2122_3$

b) Sketch an implementation of the Boolean expression for the Hot Tub Controller.
The Hot Tub Controller gives a high voltage output only when the following are satisfied: Either T is closed (true), or A, B, and C are simultaneously closed.

Therefore, the following is a logic expression exactly expressing the behavior of the Hot Tub Controller:
Out = (A * B * C) + T

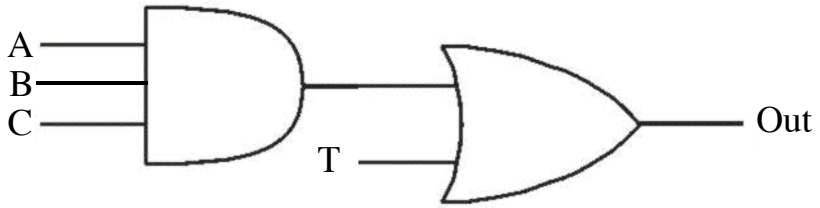

Using NANDs, note the following:
Feeding the same input into both lines of a 2-input NAND, we obtain the following truth table:

A	A	Out
1	1	0
0	0	1

In other words, a NAND can be used to invert.
Two NANDs can thus be used to perform an AND operation using the following circuit:

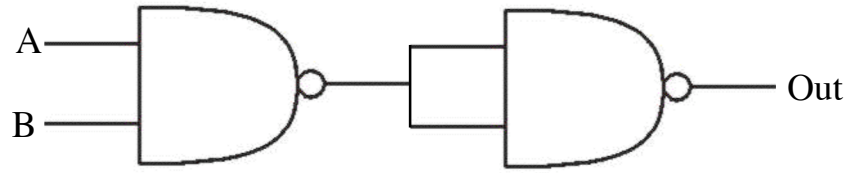

Also, NAND can be used to synthesize OR using the following structure:

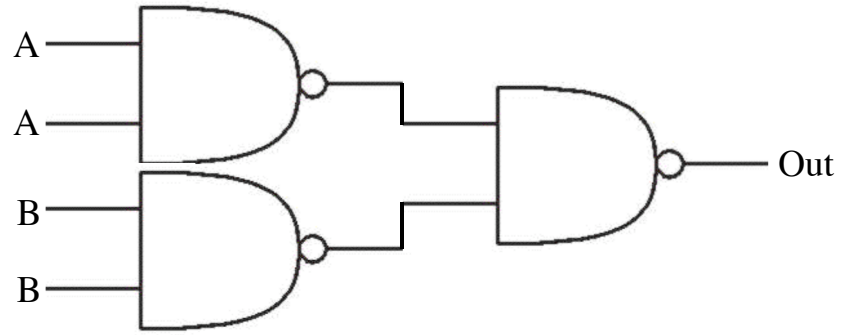

This is resultant from one of DeMorgan's Laws, specifically that

$A + B = (\overline{\bar{A} * \bar{B}})$, and from the fact that NAND can be used to invert.

So, a logically equivalent circuit of only NANDs takes the following form:

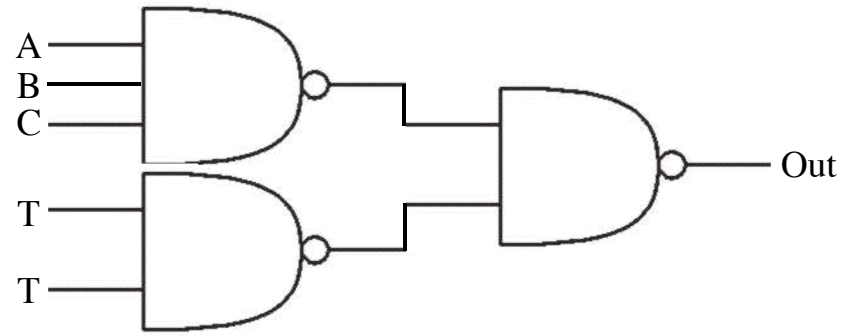

2.2 Two Element Networks

a) Plot I_{out} vs. V_{out} for the circuit shown for:

For this problem, Ohm's Law will be used for the voltage across the resistor. Suppose we set up V_R such that $V_{OUT} = V_S + V_R$. This setup satisfies the equation $I_R = V_R/R$ where I_R goes leftward through the resistor. Since the resistance is in series with the output, $I_{OUT} = -I_R$. With some algebra we come upon the following descriptive equation:

$$V_{OUT} = V_S - I_{OUT}R \rightarrow I_{OUT} = -V_{OUT}/R + V_S/R$$

Note that these equations mirror the standard form $y = mx + b$ for graphing of lines. This provides the following graphs (we use the 2nd equation above because we are plotting I vs. V (standard is "y-axis vs. x-axis"):

a. $V_s = 3V$, $R = 10k\Omega$

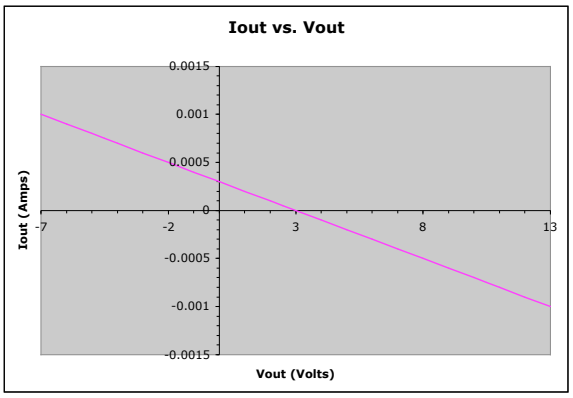

b. $V_s = 3V$, $R = 20k\Omega$

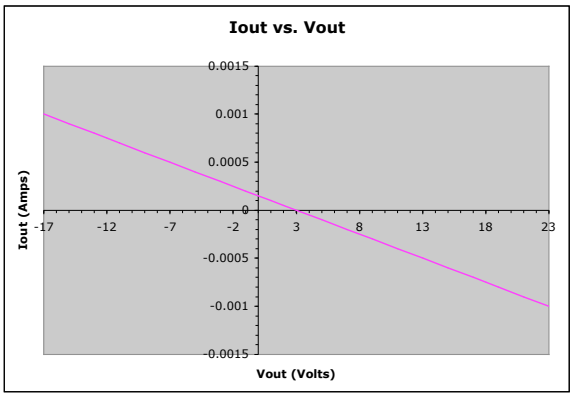

c. $V_s = -2V$, $R = 10k\Omega$

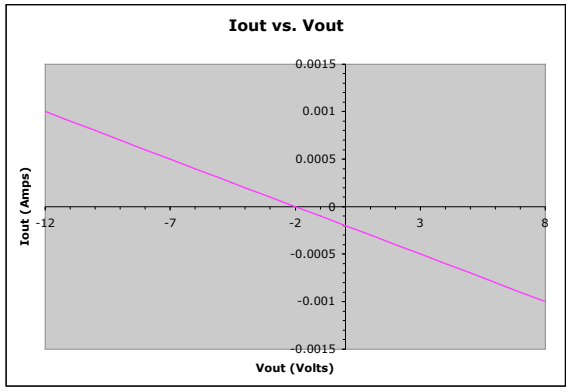

b) When $V_{out} = 5V$, determine the power out, the power into R and the power from the source. Check with conservation of power. Is everything consistent?

a. $V_S = 3V$, $R = 10k\Omega$

If $V_{OUT} = 5V$, then positive current is going through the resistor in the direction from the output to the positive side of V_S. From the power equation, we obtain a power of:

$$P_R = V^2/R = (2V)^2/(10k\Omega) = 0.4mW$$

For the output and voltage source, we must calculate the current through the resistor using Ohm's Law:

$$I_R = V/R = 2V/10k\Omega = 0.2mA \text{ (where } I_R = -I_{OUT})$$

Then, we obtain the following keeping reference directions in mind:

$$P_S = IV = 0.2mA*3V = 0.6mW$$
$$P_{OUT} = -IV = -(0.2mA*5V) = -1.0mW$$

By conservation of power, the summation of power into all elements of the circuit should yield 0, which does happen here:

$$\Sigma(\text{Power}) = 0.4mW + 0.6mW - 1.0mW = 0mW$$

b. $V_S = 3V$, $R = 20k\Omega$

Repeating the calculations,

$$I_R = V/R = 2V/20k\Omega = 0.1mA$$
$$P_R = IV = 0.1mA*2V = 0.2mW$$
$$P_S = IV = 0.1mA*3V = 0.3mW$$
$$P_{OUT} = -IV = -(0.1mA*5V) = -0.5mW$$
$$\Sigma(\text{Power}) = 0.2mW + 0.3mW - 0.5mW = 0mW$$

c. $V_S = -2V$, $R = 10k\Omega$

Repeating the calculations,

$$I_R = V/R = 7V/10k\Omega = 0.7mA$$
$$P_R = IV = 0.7mA*(7V) = 4.9mW$$
$$P_S = IV = 0.7mA*(-2V) = -1.4mW$$
$$P_{OUT} = -IV = -(0.7mA*5V) = -3.5mW$$
$$\Sigma(\text{Power}) = 4.9mW - 1.4mW - 3.5mW = 0mW$$