# Lecture #10 (with Prof. Neureuther)

## OUTLINE

- Inverting-amplifier circuit
- Summing-amplifier circuit
- Noninverting-amplifier circuit
- Difference-amplifier circuit

## Reading

Chapter 5.3-5.7



# Review: Negative Feedback

- Negative feedback is used to “linearize” a high-gain differential amplifier.

Without feedback

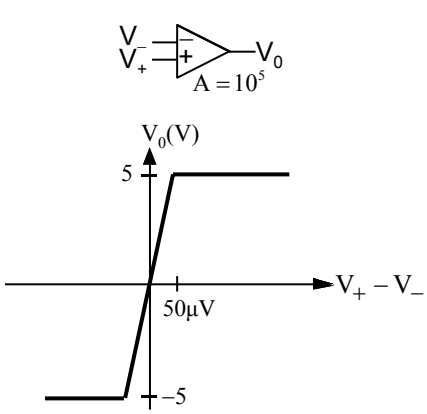


With feedback

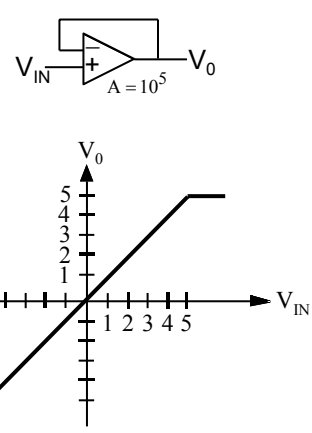

## Inverting Amplifier Circuit

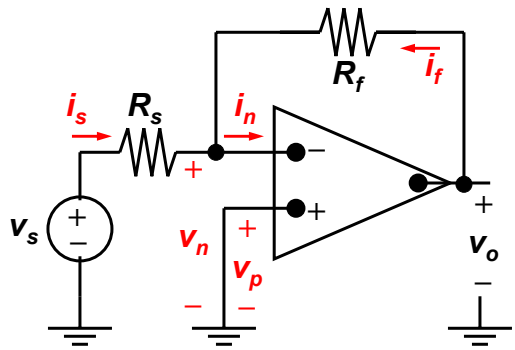


$$v_o = -\frac{R_f}{R_s} v_s$$

$i_n = 0 \rightarrow i_s = -i_f$

$v_p = 0 \rightarrow v_n = 0$



## Analysis using Realistic Op Amp Model

- In the analysis on the previous slide, the op amp was assumed to be ideal, *i.e.*

$$R_i = \infty;\ A = \infty;\ R_o = 0$$

- In reality, an op amp has finite $R_i$, finite $A$, non-zero $R_o$, and usually is loaded at its output terminals with a load resistance $R_L$. It can be shown that

$$v_o = \frac{-A + (R_o / R_f)}{\frac{R_s}{R_f}\left(1 + A + \frac{R_o}{R_i} + \frac{R_o}{R_L}\right) + \left(1 + \frac{R_o}{R_L}\right)\left(1 + \frac{R_s}{R_i}\right) + \frac{R_o}{R_f}} v_s$$

# Summing Amplifier Circuit

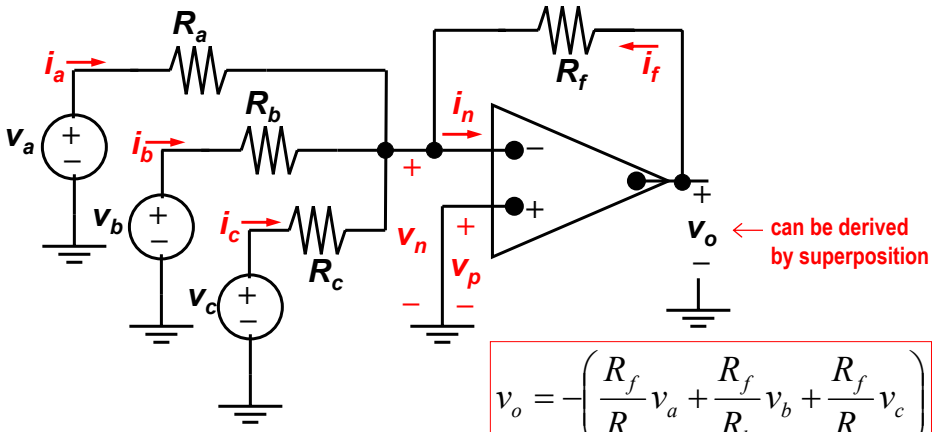


$$v_o = -\left(\frac{R_f}{R_a}v_a + \frac{R_f}{R_b}v_b + \frac{R_f}{R_c}v_c\right)$$

$i_n = 0 \Rightarrow i_a + i_b + i_c = -i_f$

$v_p = 0 \Rightarrow v_n = 0$



# Application: Digital-to-Analog Conversion

A DAC can be used to convert the digital representation of an audio signal into an analog voltage that is then used to drive speakers -- so that you can hear it!

**"Weighted-adder D/A converter"**

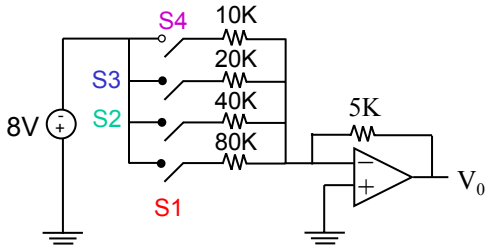


4-Bit D/A

(Transistors are used as electronic switches)

S1 closed if LSB =1
S2 " if next bit = 1
S3 " if " " = 1
S4 " if MSB = 1

| Binary number | Analog output (volts) |
|---|---|
| 0 0 0 0 | 0 |
| 0 0 0 1 | .5 |
| 0 0 1 0 | 1 |
| 0 0 1 1 | 1.5 |
| 0 1 0 0 | 2 |
| 0 1 0 1 | 2.5 |
| 0 1 1 0 | 3 |
| 0 1 1 1 | 3.5 |
| 1 0 0 0 | 4 |
| 1 0 0 1 | 4.5 |
| 1 0 1 0 | 5 |
| 1 0 1 1 | 5.5 |
| 1 1 0 0 | 6 |
| 1 1 0 1 | 6.5 |
| 1 1 1 0 | 7 |
| 1 1 1 1 | 7.5 |

MSB LSB

## Characteristic of 4-Bit DAC

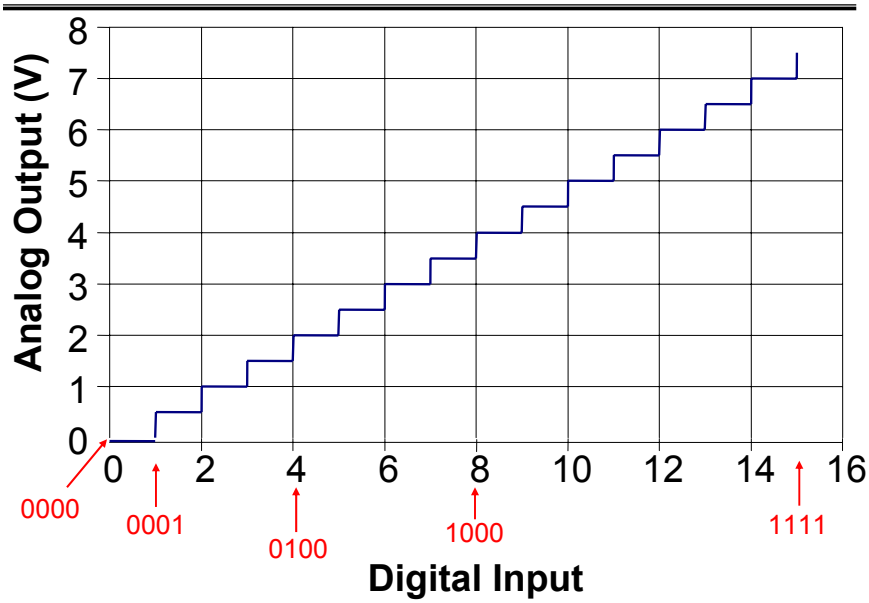




## Noninverting Amplifier Circuit

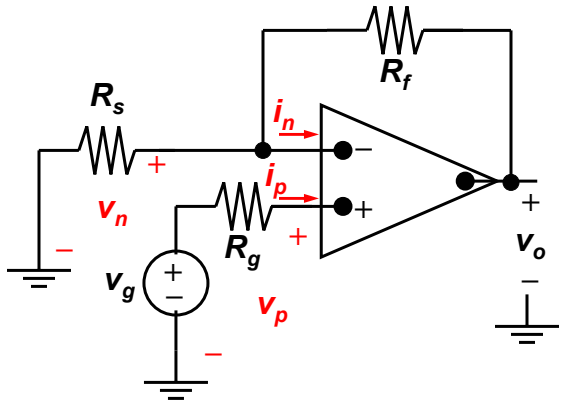


$$v_o = \frac{R_s + R_f}{R_s} v_g$$

$i_p = 0$ ➔ $v_p = v_g$ ➔ $v_n = v_g$

$i_n = 0$ ➔ $R_s$ & $R_f$ form a voltage divider

## Difference Amplifier Circuit

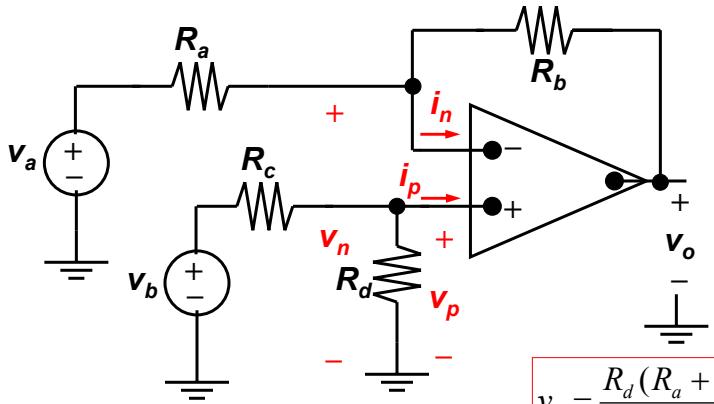


$$v_o = \frac{R_d(R_a+R_b)}{R_a(R_c+R_d)}v_b - \frac{R_b}{R_a}v_a$$

$i_n = 0 \Rightarrow \dfrac{v_n - v_a}{R_a} + \dfrac{v_n - v_o}{R_b} = 0$

$i_p = 0 \Rightarrow v_p = \dfrac{R_d}{R_c + R_d} v_b = v_n$

If $\dfrac{R_a}{R_b} = \dfrac{R_c}{R_d}$, then $v_o = \dfrac{R_b}{R_a}(v_b - v_a)$



## Difference Amplifier – Another Perspective

Redefine the inputs in terms of two other voltages:

1. ***differential mode input*** $v_{dm} \equiv v_b - v_a$
2. ***common mode input*** $v_{cm} \equiv (v_a + v_b)/2$

so that

$v_a = v_{cm} - (v_{dm}/2)$ and $v_b = v_{cm} + (v_{dm}/2)$

Then it can be shown that

$$v_o = A_{cm}v_{cm} + A_{dm}v_{dm}$$

where $A_{cm} = \dfrac{R_aR_d - R_bR_c}{R_a(R_c+R_d)}$ and $A_{dm} = \dfrac{R_d(R_a+R_b) + R_b(R_c+R_d)}{2R_a(R_c+R_d)}$

**"common mode gain"** **"differential mode gain"**

## Difference Amplifier (cont'd)

If $\frac{R_a}{R_b} = \frac{R_c}{R_d}$, then $v_{cm} = 0$ and $v_{dm} = \frac{R_b}{R_a}$

- **An ideal difference amplifier amplifies only the differential mode portion of the input voltage, and eliminates the common mode portion.**
  - provides immunity to noise (common to both inputs)
- If the resistors are not perfectly matched, the ***common mode rejection ratio*** (CMRR) is finite:

$$\boxed{CMRR \equiv \left|\frac{A_{dm}}{A_{cm}}\right|} \approx \frac{1 + R_b / R_a}{\varepsilon} \quad \text{if } \frac{R_a}{R_b} = (1-\varepsilon)\frac{R_c}{R_d}$$



## Summary

- Voltage transfer characteristic of op amp:

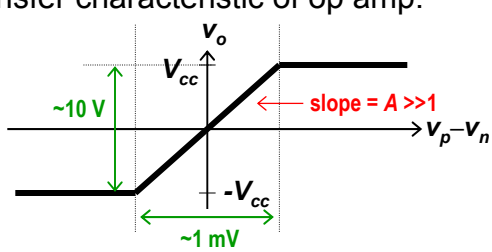


- A feedback path between an op amp's output and its <u>inverting</u> input can force the op amp to operate in its linear region, where $v_o = A\,(v_p - v_n)$
- An **ideal op amp** has **infinite input resistance $R_i$, infinite open-loop gain $A$**, and **zero output resistance $R_o$**. As a result, the input voltages and currents are constrained:

$$v_p = v_n \text{ and } i_p = -i_n = 0$$