EE247
Lecture 7

- Automatic on-chip filter tuning (continued from last lecture)
  - Continuous tuning (continued)
    - DC tuning of resistive timing element
  - Periodic digitally assisted filter tuning
    - Systems where filter is followed by ADC & DSP, existing hardware can be used to periodically update filter freq. response
- Continuous-time filter design considerations
  - Monolithic highpass filters
  - Active bandpass filter design
    - Lowpass to bandpass transformation
    - Example: 6th order bandpass filter
    - Gm-C bandpass filter using simple diff. pair
  - Various Gm-C filter implementations

Summary last lecture

- Continuous-time filters (continued)
  - Gm-C filters
- Frequency tuning for continuous-time filters
  - Trimming via fuses or laser
  - Automatic on-chip filter tuning
    - Continuous tuning
      - Utilizing VCF built with replica integrators
      - Use of VCO built with replica integrators
      - Replica single integrator in a feedback loop locked to a reference frequency

DC Tuning of Resistive Timing Element

Tuning circuit Gm → replica of Gm used in filter

Rext used to lock Gm to accurate off-chip R

Feedback forces:
IxRext @ Gm-cell input
Current flowing in Gm-Cell→ *I*
Gm=1/Rext

Issues with DC offset

Account for capacitor variations in this Gm-C implementation by trimming C in the factory

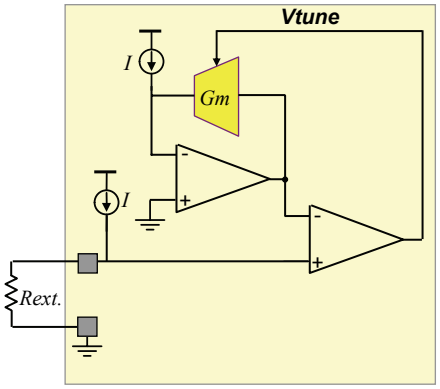

Ref: C. Laber and P.R. Gray, "A 20MHz 6th Order BiCMOS Parasitic Insensitive Continuous-time Filter and Second Order Equalizer Optimized for Disk Drive Read Channels," *IEEE Journal of Solid State Circuits,* Vol. 28, pp. 462-470, April 1993

Digitally Assisted Frequency Tuning Example:Wireless Receiver Baseband Filters

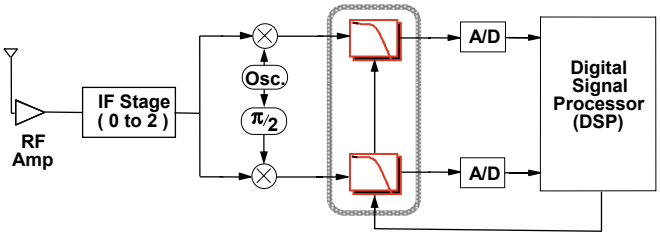

- Systems where filter is followed by ADC & DSP
  - Take advantage of existing digital signal processor capabilities to periodically test & if needed update the filter critical frequency
  - Filter tuned only at the outset of each data transmission session (off-line/periodic tuning) – can be fine tuned during times data is not transmitted or received

Example: Seventh Order Tunable Low-Pass OpAmp-RC Filter

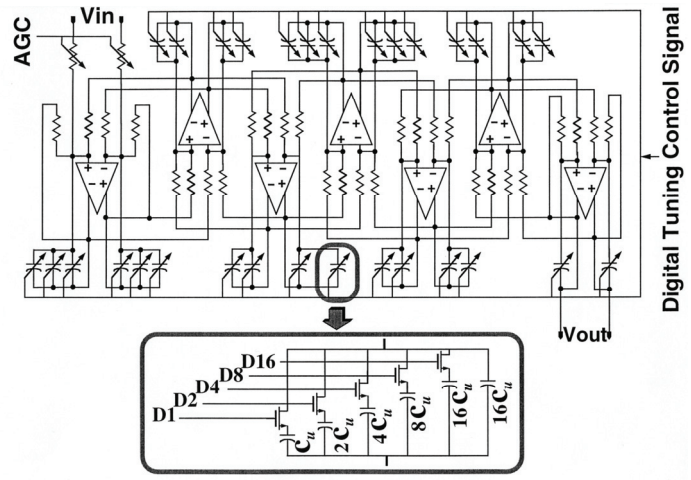

Digitally Assisted Filter Tuning Concept

Assumptions:

- System allows a period of time for the filter to undergo tuning (e.g. for a wireless transceiver during idle periods)
- An AC (e.g. a sinusoid) signal can be generated on-chip whose amplitude is a function of an on-chip DC voltage
  - AC signal generator outputs a sinusoid with peak voltage equal to the DC signal source
  - AC Signal Power =1/2 DC signal power @ the input of the filter

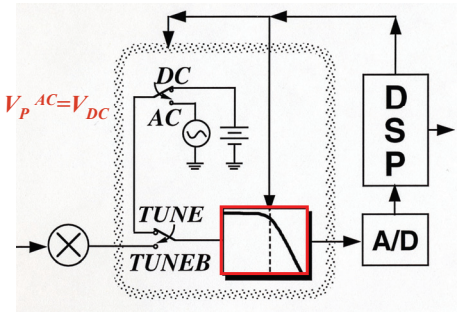

Digitally Assisted Filter Tuning Concept

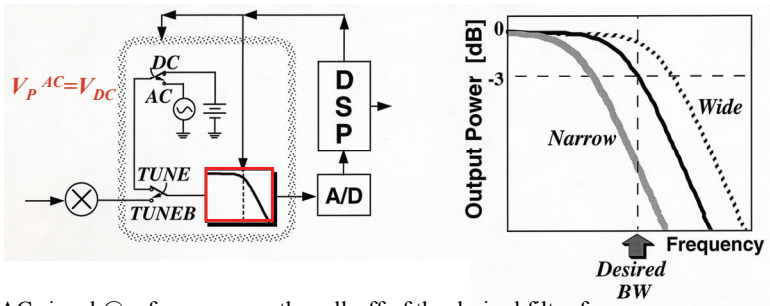

AC signal @ a frequency on the roll-off of the desired filter frequency response (e.g. -3dB frequency) $V_{AC} = V_{DC} \times sin\left(2\pi f_{-3dB}^{desired}\ t\right)$

Provision can be made → during the tuning cycle, the input of the filter is disconnected from the previous stage (e.g. mixer) and connected to:

1. DC source
2. AC source

under the control of the DSP

Digitally Assisted Filter Tuning Concept

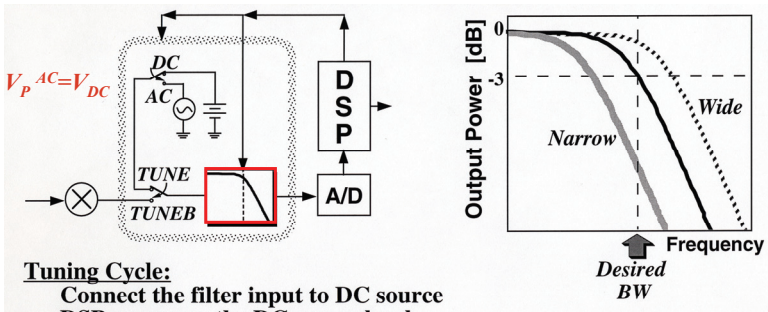

Tuning Cycle:

Connect the filter input to DC source
DSP measures the DC power level
Connect the filter input to AC souce (freq. -> desired -3dB freq.)
DSP measures the AC signal power level
If DC = 4*AC
Then filter is tuned
Else If DC > 4*AC
Then widen the filter bandwidth & repeat
Else narrow the filter bandwidth & repeat

Practical Implementation of Frequency Tuning
AC Signal Generation From DC Source

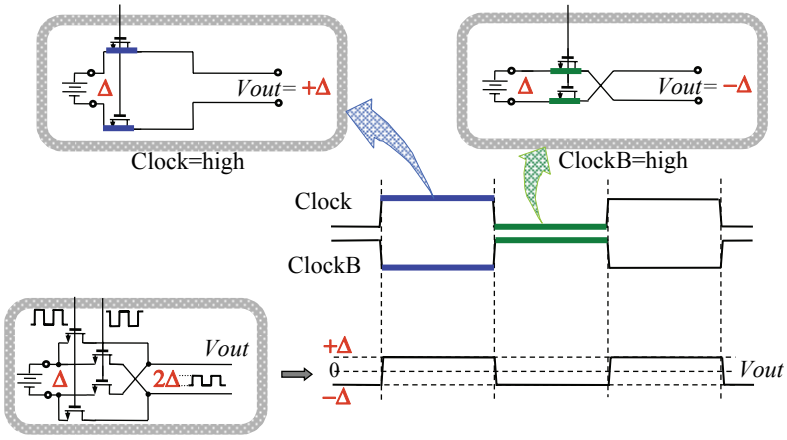

Square waveform generated → 2Δ peak to peak magnitude and @ frequency=f_{clock}

Practical Implementation of Frequency Tuning

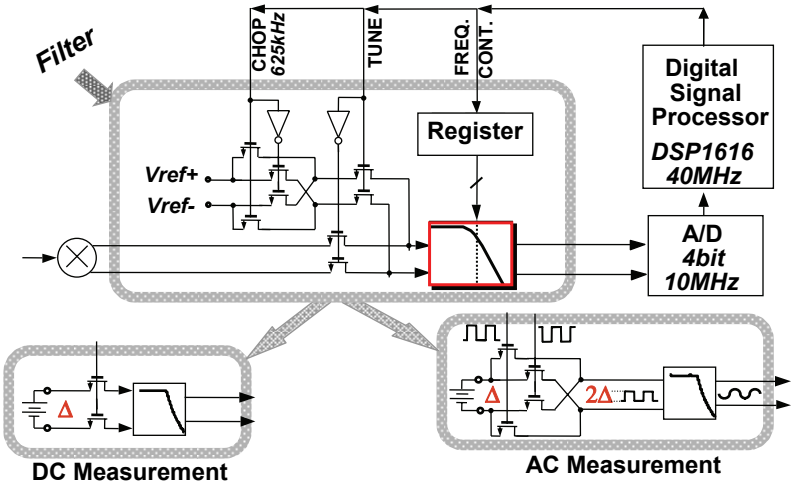

Practical Implementation of Frequency Tuning Effect of Using a Square Waveform

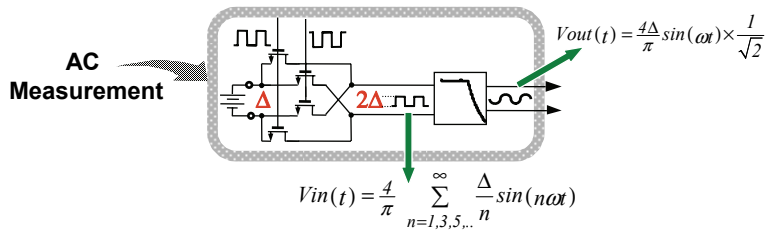

- Input signal chosen to be a square wave due to ease of generation
- Filter input signal comprises a sinusoidal waveform @ the fundamental frequency + its odd harmonics:

Key Point: The filter itself attenuates unwanted odd harmonics
→ Inaccuracy incurred by the harmonics negligible

Simplified Frequency Tuning Flowchart

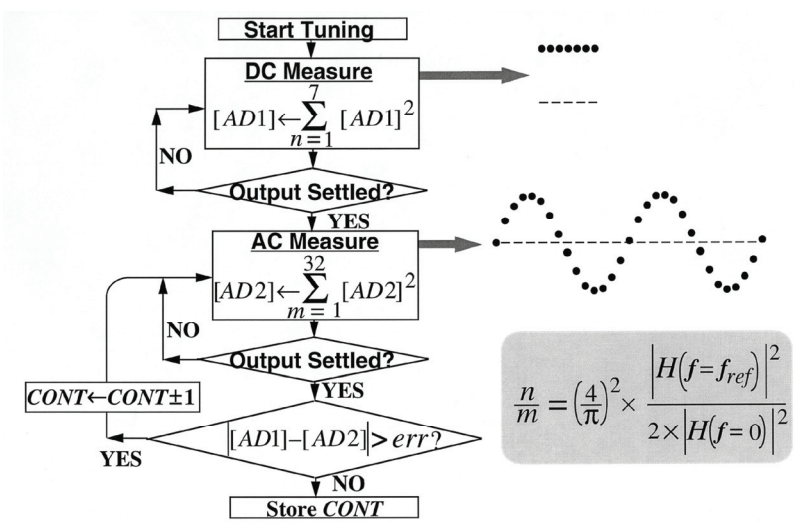

Digitally Assisted Offset Compensation

In cases where the filter DC offset cause significant error in tuning (i.e. high passband gain)

- **Offset compensation needed:**
  - ⇨**DC measurement performed in two steps:**

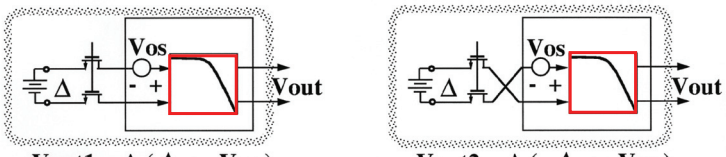

Vout1 = A (Δ + Vos) **Vout2 = A (- Δ + Vos)**

Passband Gain

⇨**DSP extracts: Offset component ➡ 1/2(Vout1 + Vout2) = A . Vos**

DC component ➡ 1/2(Vout1 - Vout2) = A . Δ

⇨**DSP substracts Vos from all subsequent AC measurement**

Filter Tuning Prototype Diagram

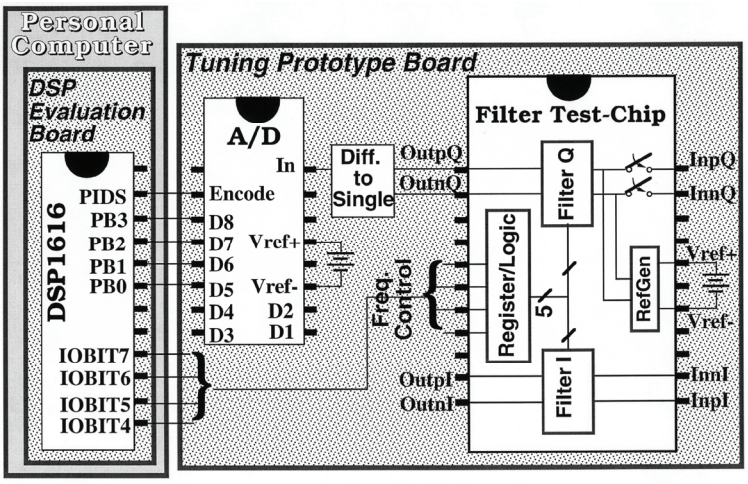

Measured Frequency Response

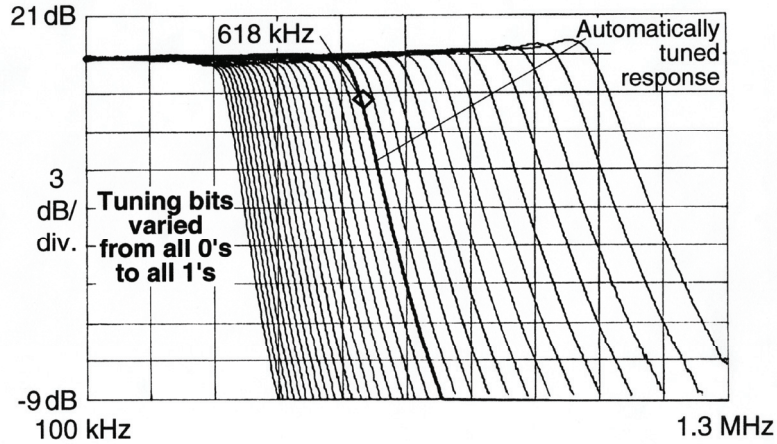

Measured Tuning Characteristics

Tunable frequency range (nom. process)		**370kHz to 1.1M**
Variations due to process		**±50%**
I/Q bandwidth imbalance		**0.1%**
Tuning resolution	***Measured***	**3.8%**
(620kHz frequency range)	***Expected***	**2-5%**
Tuning time	***Coarse+Fine***	**max. 800µsec**
	Fine only	**min. 50µsec**
Memory space required for tuning routine		**250 byte**

Off-line Digitally Assisted Tuning

- Advantages:
  - No reference signal feedthrough since tuning does not take place during data transmission (off-line)
  - Minimal additional hardware
  - Small amount of programming
- Disadvantages:
  - If acute temperature change during data transmission, filter may slip out of tune!
    - Can add fine tuning cycles during periods of data is not transmitted or received

Ref: H. Khorramabadi, M. Tarsia and N.Woo, "Baseband Filters for IS-95 CDMA Receiver Applications Featuring Digital Automatic Frequency Tuning," *1996 International Solid State Circuits Conference*, pp. 172-173.

Summary: Continuous-Time Filter Frequency Tuning

- Trimming
  - Expensive & does not account for temperature and supply etc… variations
- Automatic frequency tuning
  - Continuous tuning
    - Master VCF used in tuning loop, same tuning signal used to tune the slave (main) filter
      - Tuning quite accurate
      - Issue → reference signal feedthrough to the filter output
    - Master VCO used in tuning loop
      - Design of reliable & stable VCO challenging
      - Issue → reference signal feedthrough
    - Single integrator in negative feedback loop forces time-constant to be a function of accurate clock frequency
      - More flexibility in choice of reference frequency → less feedthrough issues
    - DC locking of a replica of the integrator to an external resistor
      - DC offset issues & does not account for integrating capacitor variations
  - Periodic digitally assisted tuning
    - Requires digital capability + minimal additional hardware
    - Advantage of no reference signal feedthrough since tuning performed off-line

RLC Highpass Filters

- Any RLC lowpass can be converted to highpass by:
  - Replacing all Cs by Ls and $L_{Norm}^{HP} = 1/C_{Norm}^{LP}$
  - Replacing all Ls by Cs and $C_{Norm}^{HP} = 1/L_{Norm}^{LP}$
  - $L^{HP}=L_r/C_{Norm}^{LP}$, $C^{HP}=C_r/L_{Norm}^{LP}$ where $L_r=R_r/\omega_r$ and $C_r=1/(R_r\omega_r)$

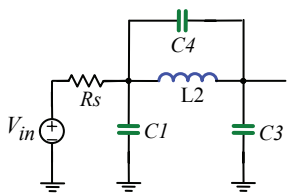

Lowpass

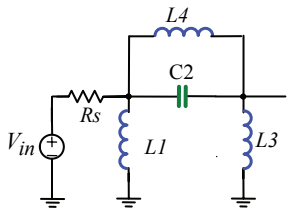

Highpass

Integrator Based High-Pass Filters
1st Order

- Conversion of simple high-pass RC filter to integrator-based type by using signal flowgraph technique

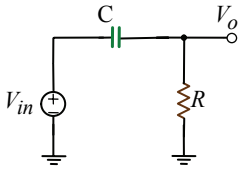

$$\frac{V_o}{V_{in}} = \frac{sRC}{1+sRC}$$

1st Order Integrator Based High-Pass Filter Signal Flowgraph

$$V_R = V_{in} - V_C$$

$$V_C = I_C \times \frac{1}{sC}$$

$$V_o = V_R$$

$$I_R = V_R \times \frac{1}{R}$$

$$I_C = I_R$$

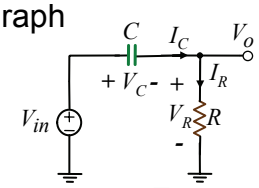

SFG

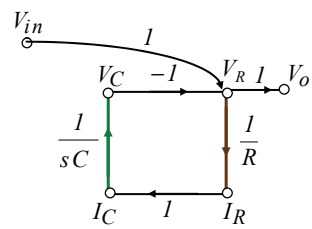

1st Order Integrator Based High-Pass Filter SGF

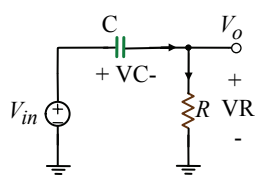

SGF

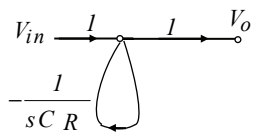

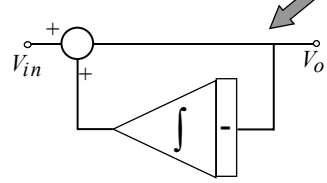

Note: Addition of an integrator in the feedback path → High pass frequency shaping

Addition of Integrator in Feedback Path

Let us assume flat gain in forward path (a)
Effect of addition of an integrator in the feedback path:

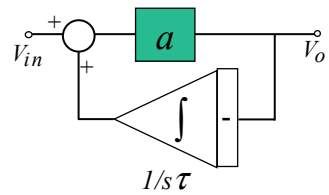

$$\frac{V_o}{V_{in}} = \frac{a}{1+af}$$

$$\frac{V_o}{V_{in}} = \frac{a}{1+a/s\tau} = \frac{s\tau}{1+s\tau/a}$$

$$\rightarrow zero@DC \quad \& \quad pole@ \quad \omega_{pole} = -\frac{a}{\tau} = -a \times \omega_0^{intg}$$

Note: For large forward path gain, a, can implement high pass function with high corner frequency
Addition of an integrator in the feedback path → zero @ DC + pole @ $ax\omega_0^{intg}$
This technique used for offset cancellation in systems where the low frequency content is not important and thus disposable

Bandpass Filters

- Bandpass filters → two cases:
  1- Low Q or wideband ($Q < 5$)
  → Combination of lowpass & highpass

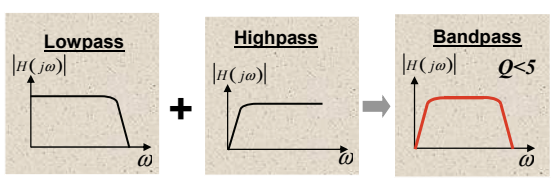

2- High Q or narrow-band ($Q > 5$)
→ Direct implementation

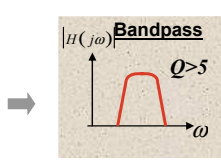

Narrow-Band Bandpass Filters
Direct Implementation

- Narrow-band BP filters → Design based on lowpass prototype
- Same tables used for LPFs are also used for BPFs

Lowpass Freq. Mask

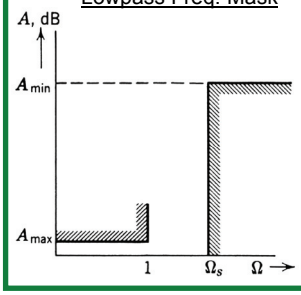

Bandpass Freq. Mask

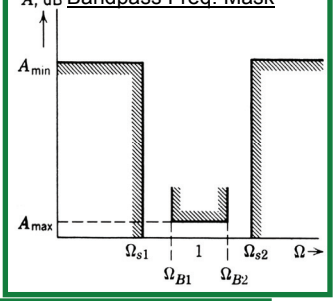

$$s \Rightarrow Q \times \left[\frac{s}{\omega_c} + \frac{\omega_c}{s} \right] \qquad \frac{\Omega_s}{\Omega_c} \Rightarrow \frac{\Omega_{s2} - \Omega_{s1}}{\Omega_{B2} - \Omega_{B1}}$$

Lowpass to Bandpass Transformation

Lowpass pole/zero (s-plane)

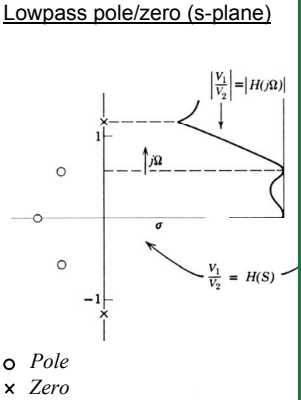

Bandpass pole/zero (s-plane)

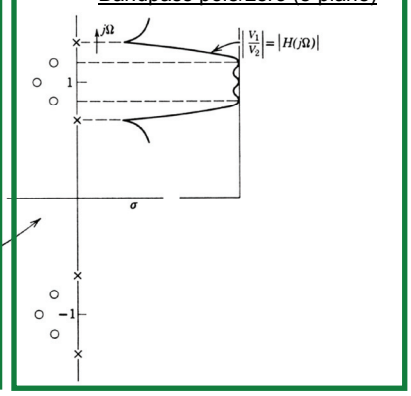

From: Zverev, *Handbook of filter synthesis*, Wiley, 1967- p.156.

Lowpass to Bandpass Transformation Table

Lowpass RLC filter structures & tables used to derive bandpass filters

$$Q = Q_{filter}$$

From:
Zverev,
Handbook of filter synthesis,
Wiley, 1967- p.157.

LP	BP	BP Values
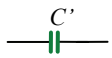	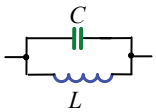	$C = QC' \times \frac{1}{R_r \omega_r}$, $L = \frac{1}{QC'} \times \frac{R_r}{\omega_r}$
		$L = QL' \times \frac{R_r}{\omega_r}$, $C = \frac{1}{QL'} \times \frac{1}{R_r \omega_r}$

C' & L' are normilzed LP values

Lowpass to Bandpass Transformation Example: 3rd Order LPF → 6th Order BPF

Lowpass

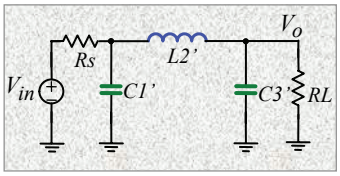

Bandpass

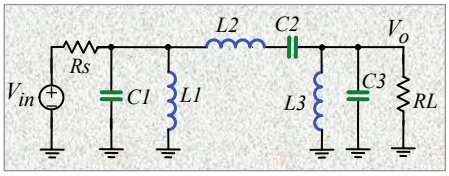

- Each capacitor replaced by parallel L& C
- Each inductor replaced by series L&C

Lowpass to Bandpass Transformation
Example: 3rd Order LPF → 6th Order BPF

$$C_1 = QC_1' \times \frac{1}{R\omega_0}$$

$$L_1 = \frac{1}{QC_1'} \times \frac{R}{\omega_0}$$

$$C_2 = \frac{1}{QL_2'} \times \frac{1}{R\omega_0}$$

$$L_2 = QL_2' \times \frac{R}{\omega_0}$$

$$C_3 = QC_3' \times \frac{1}{R\omega_0}$$

$$L_3 = \frac{1}{QC_3'} \times \frac{R}{\omega_0}$$

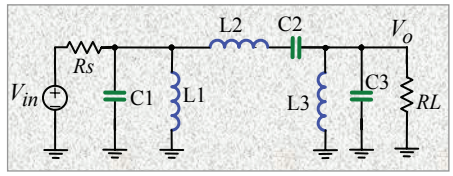

Where:

C_1' , L_2' , C_3' → Normalized lowpass values

Q → Bandpass filter quality factor

ω_0 → Filter center frequency

Lowpass to Bandpass Transformation
Signal Flowgraph

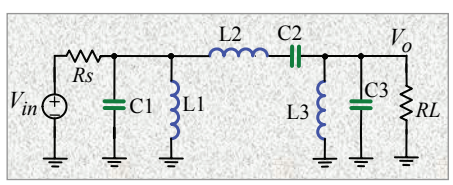

1- Voltages & currents named for all components
2- Use KCL & KVL to derive state space description
3- To have BMFs in the integrator form
   Cap. voltage expressed as function of its current $V_C=f(I_C)$
   Ind. current as a function of its voltage $I_L=f(V_L)$
4- Use state space description to draw SFG
5- Convert all current nodes to voltage

Signal Flowgraph
6th Order BPF versus 3rd Order LPF

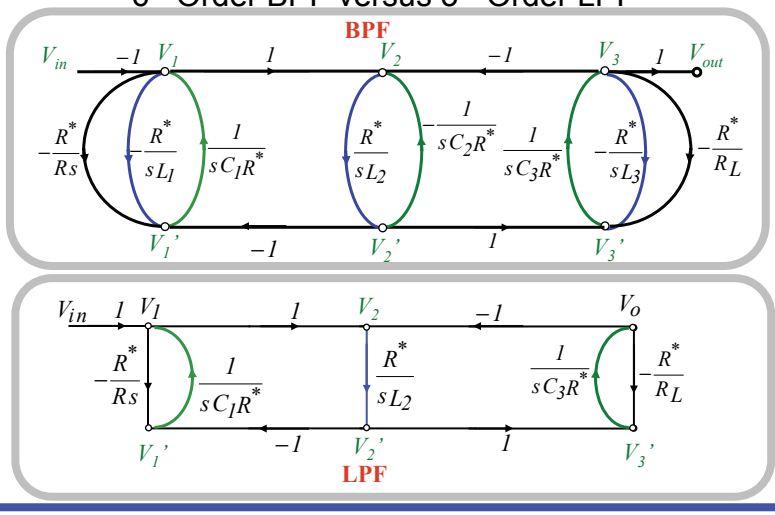

Signal Flowgraph
6th Order Bandpass Filter

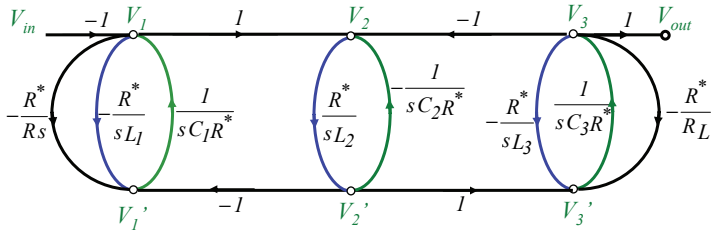

Note: each *C & L* in the original lowpass prototype → replaced by a *resonator*
Substituting the bandpass *L1, C1,.....* by their normalized lowpass equivalent from page 29
The resulting SFG is:

Signal Flowgraph
6th Order Bandpass Filter

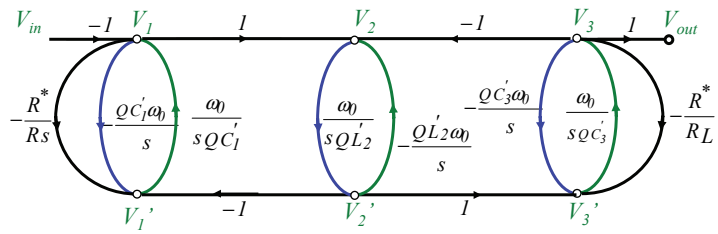

- Note the integrators → different time constants
  - Ratio of time constants for two integrator in each resonator loop~ Q^2
    → Typically, requires high component ratios
    → Poor matching
- Desirable to modify SFG so that <u>all integrators have equal time constants for optimum matching.</u>
  - To obtain equal integrator time constant → use node scaling

Signal Flowgraph
6th Order Bandpass Filter

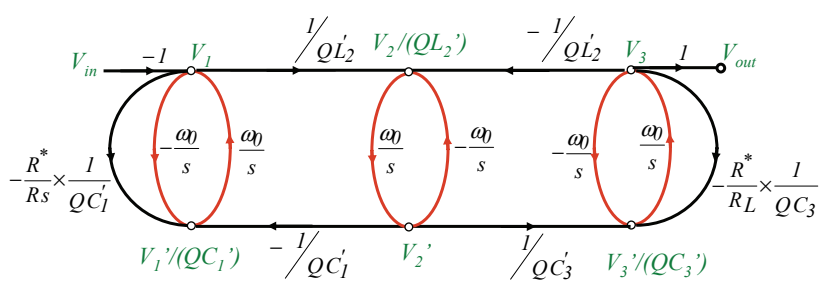

- All integrator time-constants → equal
- To simplify implementation → choose $RL=Rs=R^*$

Signal Flowgraph
6th Order Bandpass Filter

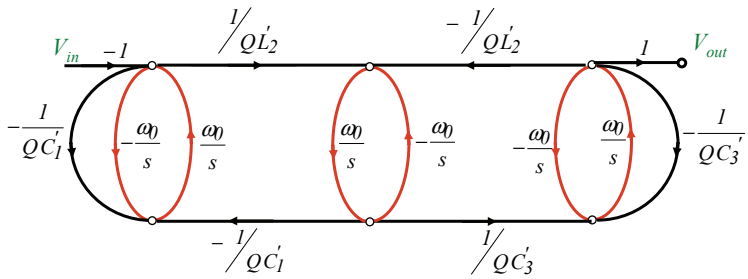

Let us try to build this bandpass filter using the simple Gm-C structure

Second Order Gm-C Filter
Using Simple Source-Couple Pair Gm-Cell

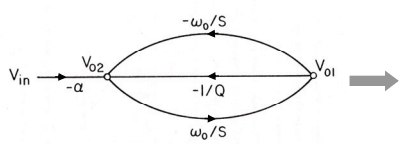

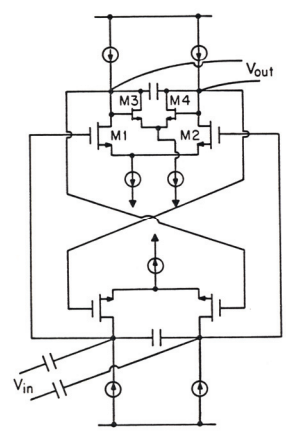

- Center frequency:

$$\omega_o = \frac{g_m^{M1,2}}{2 \times C_{intg}}$$

- Q function of:

$$Q = \frac{g_m^{M1,2}}{g_m^{M3,4}}$$

Use this structure for the 1st and the 3rd resonator
Use similar structure w/o M3, M4 for the 2nd resonator
How to couple the resonators?

Coupling of the Resonators
1- Additional Set of Input Devices

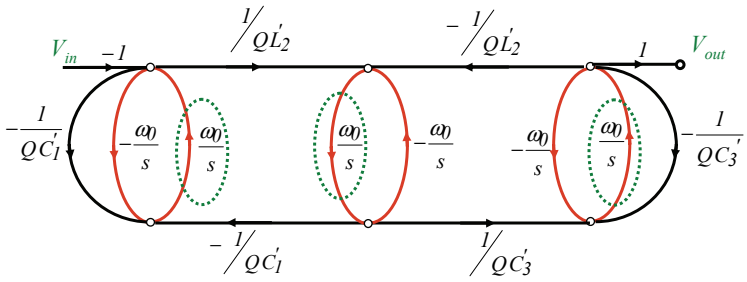

Coupling of resonators:
Use additional input source coupled pairs for the highlighted integrators
For example, the middle integrator requires 3 sets of inputs

Example: Coupling of the Resonators
1- Additional Set of Input Devices

- Add one source couple pair for each additional input
- Coupling level → ratio of device widths
- Disadvantage → extra power dissipation

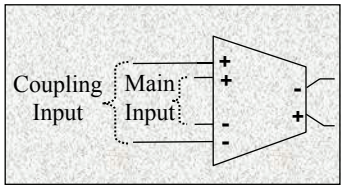

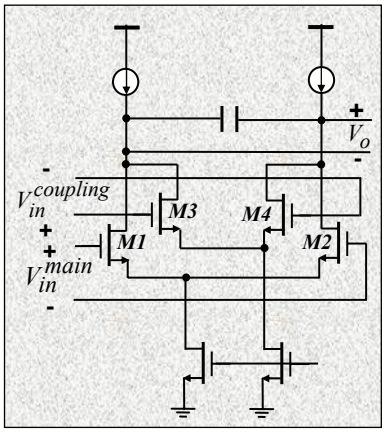

Coupling of the Resonators
2- Modify SFG → Bidirectional Coupling Paths

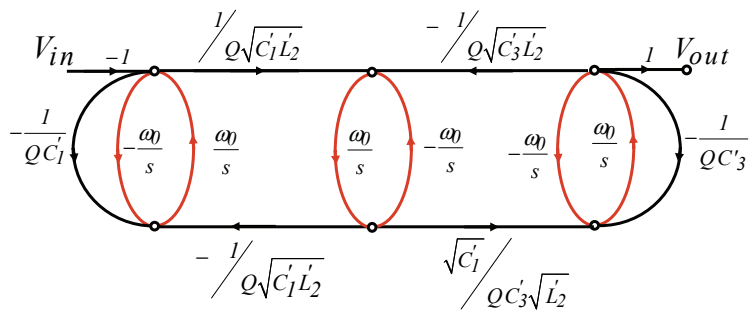

Modified signal flowgraph to have equal coupling between resonators

- In most filter cases $C_1' = C_3'$
- Example: For a butterworth lowpass filter $C_1' = C_3' = 1$ & $L_2' = 2$
- Assume desired overall bandpass filter $Q=10$

Sixth Order Bandpass Filter Signal Flowgraph

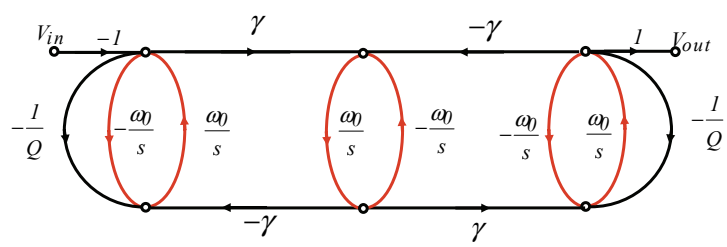

- Where for a Butterworth shape $\gamma = \frac{1}{Q\sqrt{2}}$
- Since in this example $Q=10$ then: $\gamma \approx \frac{1}{14}$

Sixth Order Bandpass Filter Signal Flowgraph SFG Modification

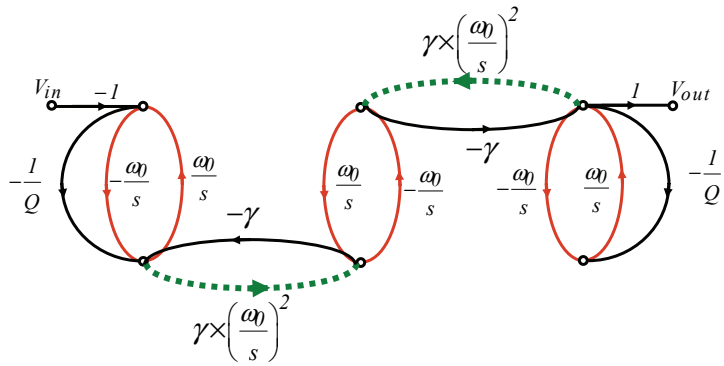

Sixth Order Bandpass Filter Signal Flowgraph SFG Modification

For narrow band filters (high Q) where frequencies within the passband are close to ω_0 *narrow-band approximation* can be used:

Within filter passband: $$\left(\frac{\omega_0}{\omega}\right)^2 \approx 1$$

$$\gamma\times\left(\frac{\omega_0}{s}\right)^2 = \gamma\times\left(\frac{\omega_0}{j\omega}\right)^2 \approx -\gamma$$

The resulting SFG:

Sixth Order Bandpass Filter Signal Flowgraph SFG Modification

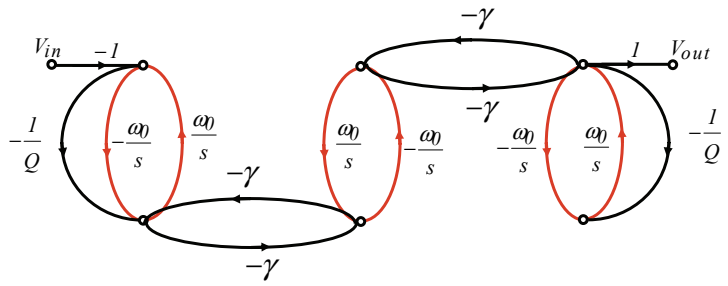

Bidirectional coupling paths, can easily be implemented with coupling capacitors → no extra power dissipation

Sixth Order Gm-C Bandpass Filter Utilizing Simple Source-Coupled Pair Gm-Cell

$$\gamma = \frac{C_k}{2\times C_{int\,g} + C_k}$$

$$C_k = \frac{2\times C_{int\,g}}{\frac{1}{\gamma} - 1}$$

$$\gamma = 1/14$$

$$\rightarrow C_k = \frac{2}{13} C_{int\,g}$$

Parasitic cap. at integrator output, if unaccounted for, will result in inaccuracy in γ

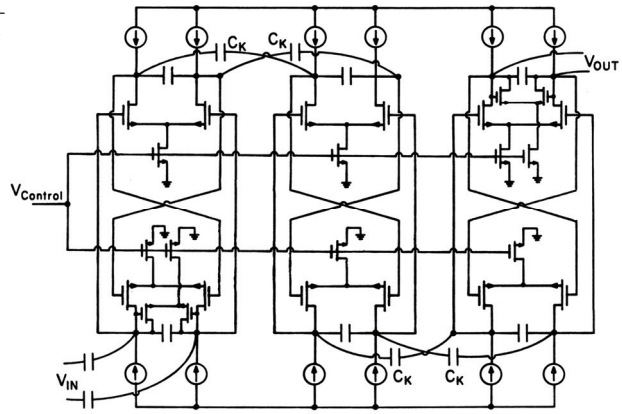

Sixth Order Gm-C Bandpass Filter Narrow-Band versus Exact Frequency Response Simulation

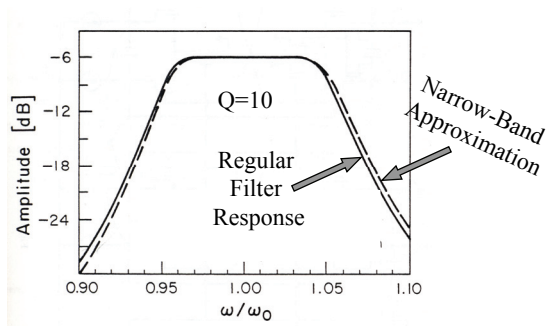

Simplest Form of CMOS Gm-Cell Nonidealities

- DC gain (integrator Q)

$$a = \frac{g_m^{M1,2}}{g_0^{M1,2} + g_{load}}$$

$$a = \frac{2L}{\theta\left(V_{gs} - V_{th}\right)_{M1,2}}$$

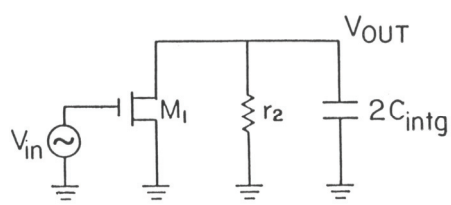

Small Signal Differential Mode Half-Circuit

- Where a denotes DC gain & θ is related to channel length modulation by:

$$\lambda = \frac{\theta}{L}$$

- Seems no extra poles!

CMOS Gm-Cell High-Frequency Poles

Cross section view of a MOS transistor operating in saturation

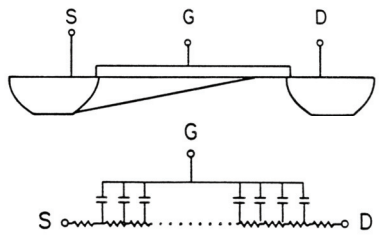

Distributed channel resistance & gate capacitance

- Distributed nature of gate capacitance & channel resistance results in infinite no. of high-frequency poles

CMOS Gm-Cell High-Frequency Poles

$$P_2^{effective} \approx \frac{1}{\sum_{i=2}^{\infty} \frac{1}{P_i}}$$

$$\boxed{P_2^{effective} \approx 2.5\omega_t^{M1,2}}$$

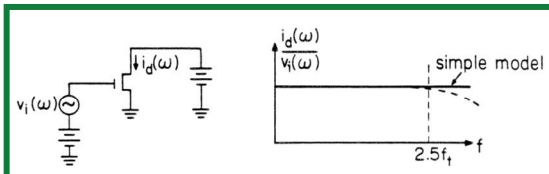

High frequency behavior of an MOS transistor operating in saturation region

$$\omega_t^{M1,2} = \frac{g_m^{M1,2}}{2/3C_{ox}WL} = \frac{3}{2}\frac{\mu\left(V_{gs}-V_{th}\right)_{M1,2}}{L^2}$$

- Distributed nature of gate capacitance & channel resistance results in an effective pole at 2.5 times input device cut-off frequency

Simple Gm-Cell Quality Factor

$$a = \frac{2L}{\theta\left(V_{gs} - V_{th}\right)_{M1,2}} \qquad P_2^{effective} = \frac{15}{4}\frac{\mu\left(V_{gs} - V_{th}\right)_{M1,2}}{L^2}$$

$$Q_{real}^{intg.} \approx \frac{1}{\frac{1}{a} - \omega_o \sum_{i=2}^{\infty} \frac{1}{p_i}}$$

$$\boxed{\frac{1}{Q^{intg.}} \approx \frac{\theta\left(V_{gs} - V_{th}\right)_{M1,2}}{2L} - \frac{4}{15}\frac{\omega_o L^2}{\mu\left(V_{gs} - V_{th}\right)_{M1,2}}}$$

- Note that phase lead associated with DC gain is inversely prop. to L
- Phase lag due to high-freq. poles directly prop. to L

→ For a given ω_o there exists an optimum *L* which cancel the lead/lag phase error resulting in high integrator *Q*

Simple Gm-Cell Channel Length for Optimum Integrator Quality Factor

$$L_{opt.} \approx \left[\frac{15}{4}\frac{\theta\mu\left(V_{gs} - V_{th}\right)^2_{M1,2}}{\omega_o}\right]^{1/3}$$

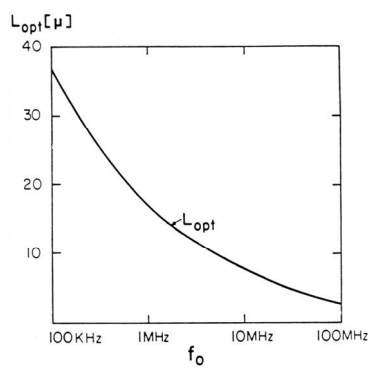

- Optimum channel length computed based on process parameters (could vary from process to process)

Source-Coupled Pair CMOS Gm-Cell Transconductance

For a source-coupled pair the differential output current (ΔI_d) as a function of the input voltage(Δv_i):

$$\Delta I_d = I_{ss}\left[\frac{\Delta v_i}{\left(V_{gs}-V_{th}\right)_{M1,2}}\right]\left\{1-\frac{1}{4}\left[\frac{\Delta v_i}{\left(V_{gs}-V_{th}\right)_{M1,2}}\right]^2\right\}^{1/2}$$

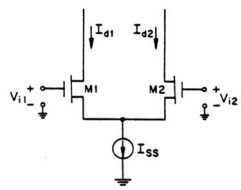

$$Note: For\ small\left[\frac{\Delta v_i}{\left(V_{gs}-V_{th}\right)_{M1,2}}\right] \rightarrow \frac{\Delta I_d}{\Delta v_i} = g_m^{M1,M2}$$

Note: As Δv_i *increases* $\frac{\Delta I_d}{\Delta v_i}$ *or the effective transconductance decreases*

$$\Delta v_i = V_{i1} - V_{i2}$$

$$\Delta I_d = I_{d1} - I_{d2}$$

Source-Coupled Pair CMOS Gm-Cell Linearity

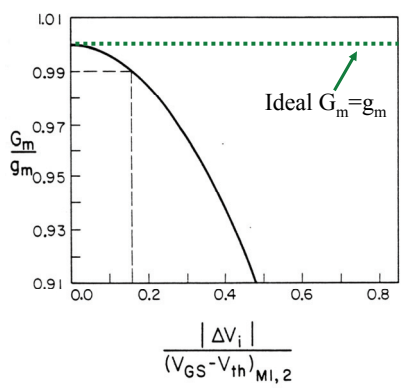

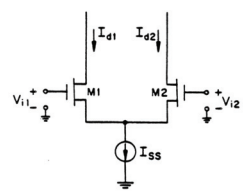

- Large signal G_m drops as input voltage increases
  → Gives rise to nonlinearity

Measure of Linearity

$$Vout = \alpha_1 Vin + \alpha_2 Vin^2 + \alpha_3 Vin^3 + \ldots\ldots\ldots\ldots$$

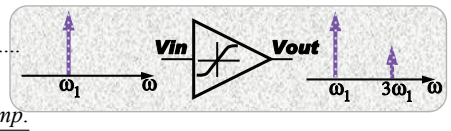

$$HD3 = \frac{amplitude\,3rd\,harmonic\,dist.\ comp.}{amplitude\ fundamental}$$

$$= \frac{1}{4}\frac{\alpha_3}{\alpha_1} Vin^2 + \ldots\ldots$$

$$IM_3 = \frac{amplitude\,3rd\,order\ IM\ \ comp.}{amplitude\ fundamental}$$

$$= \frac{3}{4}\frac{\alpha_3}{\alpha_1} Vin^2 + \frac{25}{8}\frac{\alpha_5}{\alpha_1} Vin^4 + \ldots\ldots$$

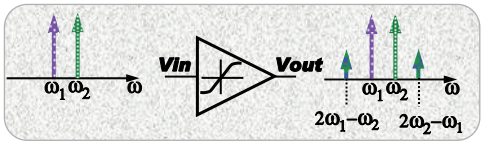

Source-Coupled Pair Gm-Cell Linearity

$$\Delta I_d = I_{ss}\left[\frac{\Delta v_i}{\left(V_{gs}-V_{th}\right)_{M1,2}}\right]\left\{1-\frac{1}{4}\left[\frac{\Delta v_i}{\left(V_{gs}-V_{th}\right)_{M1,2}}\right]^2\right\}^{1/2} \qquad (1)$$

$$\Delta I_d = a_1 \times \Delta v_i + a_2 \times \Delta v_i^2 + a_3 \times \Delta v_i^3 + \ldots\ldots\ldots\ldots$$

Series expansion used in (1)

$$a_1 = \frac{I_{ss}}{\left(V_{gs}-V_{th}\right)_{M1,2}} \qquad \& \qquad a_2 = 0$$

$$a_3 = -\frac{I_{ss}}{8\left(V_{gs}-V_{th}\right)^3_{M1,2}} \qquad \& \qquad a_4 = 0$$

$$a_5 = -\frac{I_{ss}}{128\left(V_{gs}-V_{th}\right)^5_{M1,2}} \qquad \& \qquad a_6 = 0$$

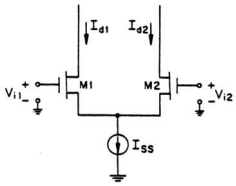

Linearity of the Source-Coupled Pair CMOS Gm-Cell

$$IM3 \approx \frac{3a_3}{4a_1}\hat{v}_i^2 + \frac{25a_5}{8a_1}\hat{v}_i^4 \ldots\ldots\ldots\ldots$$

$$Substituting\ for\ a_1, a_3, \ldots$$

$$IM3 \approx \frac{3}{32}\left(\frac{\hat{v}_i}{(V_{GS}-V_{th})}\right)^2 + \frac{25}{1024}\left(\frac{\hat{v}_i}{(V_{GS}-V_{th})}\right)^4 \ldots\ldots\ldots\ldots$$

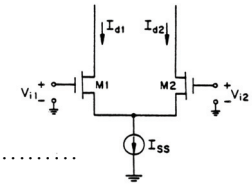

$$\hat{v}_{i\,max} \approx 4(V_{GS}-V_{th}) \times \sqrt{\frac{2}{3} \times IM3}$$

$$IM_3 = 1\% \ \&\ (V_{GS}-V_{th}) = 1V \Rightarrow \hat{V}_{in}^{rms} \approx 230mV$$

- Note that max. signal handling capability function of gate-overdrive voltage

Simplest Form of CMOS Gm Cell Disadvantages

•Max. signal handling capability function of gate-overdrive

$$IM_3 \propto (V_{GS}-V_{th})^{-2}$$

•Critical freq. is also a function of gate-overdrive

$$\omega_o = \frac{g_m^{M1,2}}{2 \times C_{int\,g}}$$

$$\text{since}\quad g_m = \mu C_{ox}\frac{W}{L}(V_{gs}-V_{th})$$

$$\text{then}\quad \omega_o \propto (V_{gs}-V_{th})$$

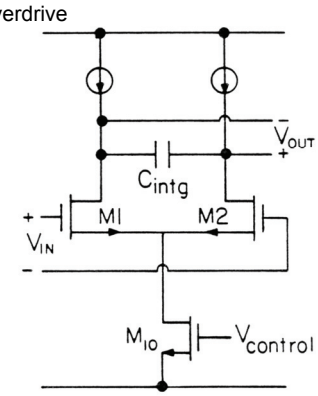

→ Filter tuning affects max. signal handling capability!

Simplest Form of CMOS Gm Cell Removing Dependence of Maximum Signal Handling Capability on Tuning

- Can overcome problem of max. signal handling capability being a function of tuning by providing tuning through :
  - Coarse tuning via switching in/out binary-weighted cross-coupled pairs→ Try to keep gate overdrive voltage constant
  - Fine tuning through varying current sources

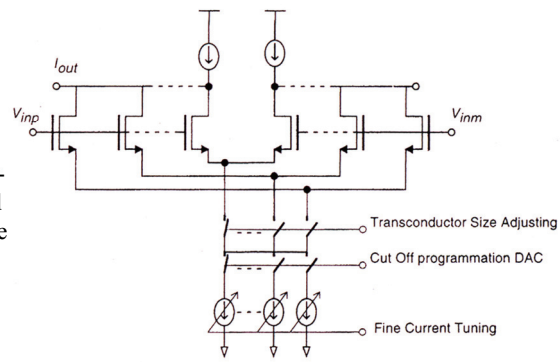

→ Dynamic range dependence on tuning removed (to 1st order)

Ref: R.Castello ,I.Bietti, F. Svelto , "High-Frequency Analog Filters in Deep Submicron Technology , "*International Solid State Circuits Conference*, pp 74-75, 1999.

Dynamic Range for Source-Coupled Pair Based Filter

$$IM_3 = 1\% \ \& \ (V_{GS} - V_{th}) = 1V \ \Rightarrow V_{in}^{rms} \approx 230mV$$

- Minimum detectable signal determined by total noise voltage
- It can be shown for the 6th order Butterworth bandpass filter fundamental noise contribution is given by:

$$\sqrt{\overline{v_o^2}} \approx \sqrt{3\,Q\frac{k\,T}{C_{intg}}}$$

$$Assuming \quad Q = 10 \quad C_{intg} = 5pF$$

$$v_{noise}^{rms} \approx 160\mu V$$

$$since \ v_{max}^{rms} = 230mV$$

$$Dynamic\ Range = 20log\frac{230x10^{-3}}{160x10^{-6}} \approx 63dB$$

Simplest Form of CMOS Gm-Cell

- Pros
  - Capable of very high frequency performance (highest?)
  - Simple design
- Cons
  - Tuning affects max. signal handling capability (can overcome)
  - Limited linearity (possible to improve)
  - Tuning affects power dissipation

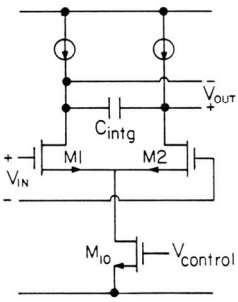

Ref: H. Khorramabadi and P.R. Gray, "High Frequency CMOS continuous-time filters," *IEEE Journal of Solid-State Circuits,* Vol.-SC-19, No. 6, pp.939-948, Dec. 1984.

Gm-Cell
Source-Coupled Pair with Degeneration

$$I_d = \frac{\mu C_{ox}}{2}\frac{W}{L}\left[2\left(V_{gs}-V_{th}\right)V_{ds}-V_{ds}^2\right]$$

$$g_{ds} = \frac{\partial I_d}{\partial V_{ds}} \approx \mu C_{ox}\frac{W}{L}\left(V_{gs}-V_{th}\right)\Big|_{V_{ds}\ small}$$

$$g_{eff} = \frac{1}{\frac{1}{g_{ds}^{M3}}+\frac{2}{g_m^{M1,2}}}$$

$$for\ g_m^{M1,2} >> g_{ds}^{M3}$$

$$g_{eff} \approx g_{ds}^{M3}$$

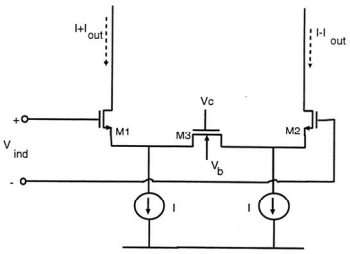

M3 operating in triode mode → source degeneration→ determines overall gm
Provides tuning through varing Vc (DC voltage source)

Gm-Cell
Source-Coupled Pair with Degeneration

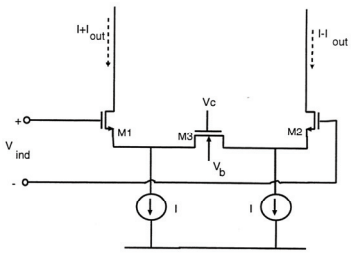

- Pros
  - Moderate linearity
  - Continuous tuning provided by varying Vc
  - Tuning does not affect power dissipation
- Cons
  - Extra poles associated with the source of M1,2,3 → Low frequency applications only

Ref: Y. Tsividis, Z. Czarnul and S.C. Fang, "MOS transconductors and integrators with high linearity," *Electronics Letters,* vol. 22, pp. 245-246, Feb. 27, 1986

BiCMOS Gm-Cell
Example

- MOSFET in triode mode (M1):

$$I_d = \frac{\mu C_{ox}}{2}\frac{W}{L}\left[2\left(V_{gs}-V_{th}\right)V_{ds}-V_{ds}^2\right]$$

$$g_m^{M1} = \frac{\partial I_d}{\partial V_{gs}} = \mu C_{ox}\frac{W}{L}V_{ds}$$

- Note that if V_{ds} is kept constant → g_m stays constant
- Linearity performance → keep gm constant as Vin varies→ function of how constant V_{ds}^{M1} can be held
  - Need to minimize Gain @ Node X

$$A_x = \frac{V_x}{V_{in}} = g_m^{M1} / g_m^{B1}$$

- Since for a given current, g_m of BJT is larger compared to MOS- preferable to use BJT
- Extra pole at node X could limit max. freq.

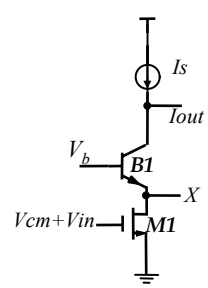

Varying V_b changes V_{ds}^{M1}
→ adjustable overall stage g_m

Alternative Fully CMOS Gm-Cell Example

- BJT replaced by a MOS transistor with boosted g_m
- Lower frequency of operation compared to the BiCMOS version due to more parasitic capacitance at nodes A & B

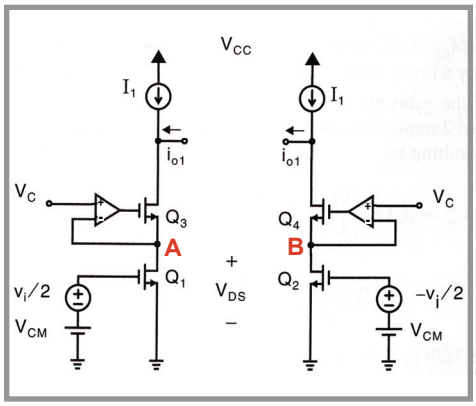

BiCMOS Gm-C Integrator

- Differential- needs common-mode feedback ckt
- Freq.tuned by varying Vb
- Design tradeoffs:
  - Extra poles at the input device drain junctions
  - Input devices have to be small to minimize parasitic poles
  - Results in high input-referred offset voltage → could drive ckt into non-linear region
  - Small devices → high 1/f noise

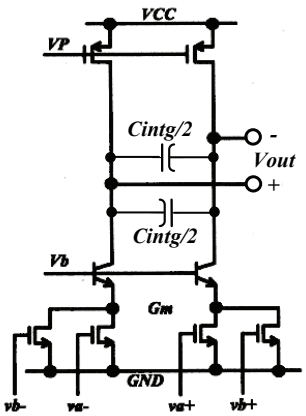

7th Order Elliptic Gm-C LPF For CDMA RX Baseband Application

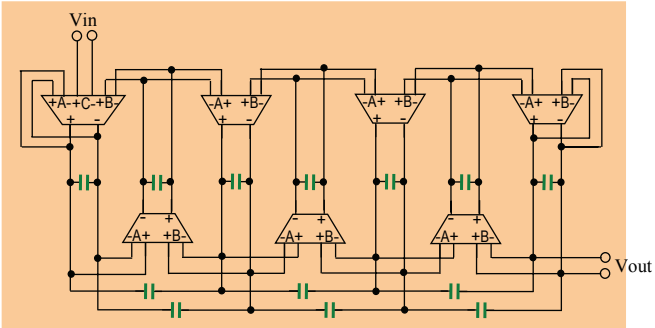

- Gm-Cell in previous page used to build a 7th order elliptic filter for CDMA baseband applications (625kHz corner frequency)
- In-band dynamic range of <50dB achieved

Comparison of 7th Order Gm-C versus Opamp-RC LPF

- Gm-C filter requires 4 times less intg. cap. area compared to Opamp-RC
  - →For low-noise applications where filter area is dominated by Cs, could make a significant difference in the total area
- Opamp-RC linearity superior compared to Gm-C
- Power dissipation tends to be lower for Gm-C since OTA load is C and thus no need for buffering

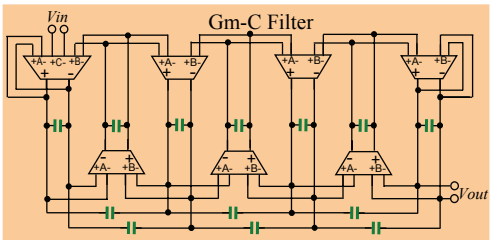

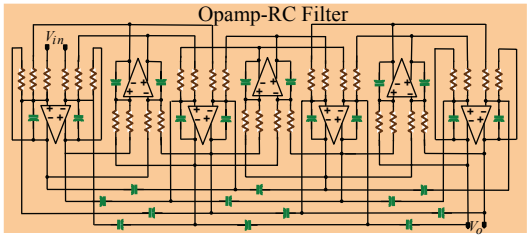

BiCMOS Gm-OTA-C Integrator

- Used to build filter for disk-drive applications
- Since high frequency of operation, time-constant sensitivity to parasitic caps significant.
  → Opamp used
- M2 & M3 added to compensate for phase lag (provides phase lead)

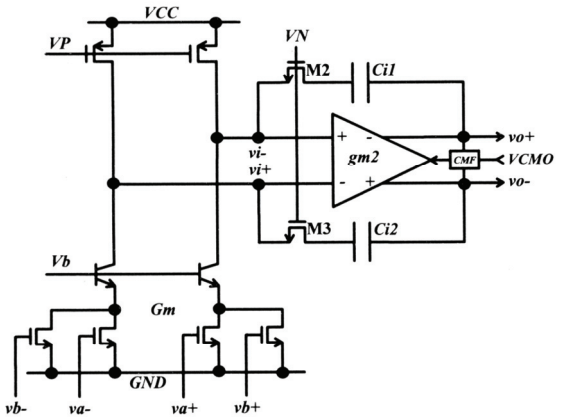

Ref: C. Laber and P.Gray, "A 20MHz 6th Order BiCMOS Parasitic Insensitive Continuous-time Filter & Second Order Equalizer Optimized for Disk Drive Read Channels," *IEEE Journal of Solid State Circuits,* Vol. 28, pp. 462-470, April 1993.

6th Order BiCMOS Continuous-time Filter & Second Order Equalizer for Disk Drive Read Channels

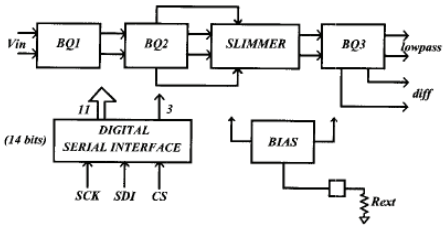

- Gm-C-opamp of the previous page used to build a 6th order filter for Disk Drive
- Filter consists of cascade of 3 biquads with max. Q of 2 each
- Performance in the order of 40dB SNDR achieved for up to 20MHz corner frequency

Ref: C. Laber and P.Gray, "A 20MHz 6th Order BiCMOS Parasitic Insensitive Continuous-time Filter & Second Order Equalizer Optimized for Disk Drive Read Channels," *IEEE Journal of Solid State Circuits,* Vol. 28, pp. 462-470, April 1993.

Gm-Cell
Source-Coupled Pair with Degeneration

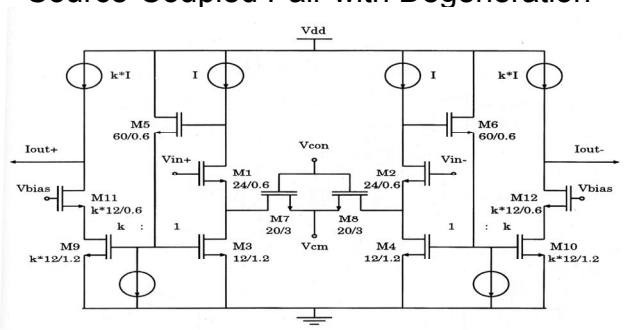

- Gm-cell intended for low Q disk drive filter
- *M7,8* operating in triode mode provide source degeneration for *M1,2*
  → determine the overall g_m of the cell

Ref: I.Mehr and D.R.Welland, "A CMOS Continuous-Time Gm-C Filter for PRML Read Channel Applications at 150 Mb/s and Beyond", IEEE Journal of Solid-State Circuits, April 1997, Vol.32, No.4, pp. 499-513.

Gm-Cell
Source-Coupled Pair with Degeneration

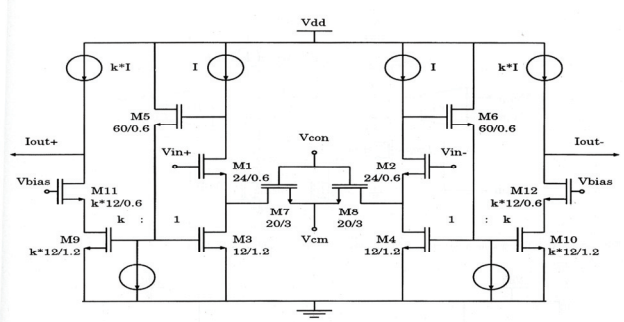

– Feedback provided by M5,6 maintains the gate-source voltage of M1,2 constant by forcing their current to be constant→ helps deliver Vin across M7,8 with good linearity

– Current mirrored to the output via M9,10 with a factor of k → overall gm scaled by k

– Performance level of about $50dB$ SNDR at f_{corner} of $25MHz$ achieved

BiCMOS Gm-C Integrator

- Needs higher supply voltage compared to the previous design since quite a few devices are stacked vertically
- M1,2 → triode mode
- Q1,2 → hold V_{ds} of M1,2 constant
- Current ID used to tune filter critical frequency by varying V_{ds} of M1,2 and thus controlling *gm* of M1,2
- M3, M4 operate in triode mode and added to provide common-mode feedback

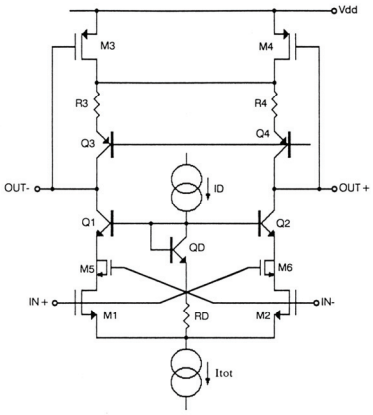

Ref: R. Alini, A. Baschirotto, and R. Castello, "Tunable BiCMOS Continuous-Time Filter for High-Frequency Applications," *IEEE Journal of Solid State Circuits,* Vol. 27, No. 12, pp. 1905-1915, Dec. 1992.

BiCMOS Gm-C Integrator

- M5 & M6 configured as capacitors- added to compensate for RHP zero due to Cgd of M1,2 (moves it to LHP) size of M5,6 → 1/3 of M1,2

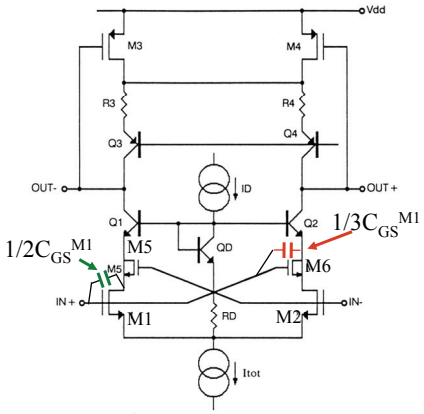

Ref: R. Alini, A. Baschirotto, and R. Castello, "Tunable BiCMOS Continuous-Time Filter for High-Frequency Applications," *IEEE Journal of Solid State Circuits,* Vol. 27, No. 12, pp. 1905-1915, Dec. 1992.