EE247
Lecture 4

- Ladder type filters
  - For simplicity, will start with all pole ladder type filters
    - Convert to integrator based form- example shown
  - Then will attend to high order ladder type filters incorporating zeros
    - Implement the same 7th order elliptic filter in the form of ladder RLC with zeros
      - Find level of sensitivity to component mismatch
      - Compare with cascade of biquads
    - Convert to integrator based form utilizing SFG techniques
  - Effect of Integrator Non-Idealities on Filter Frequency Characteristics

LC Ladder Filters

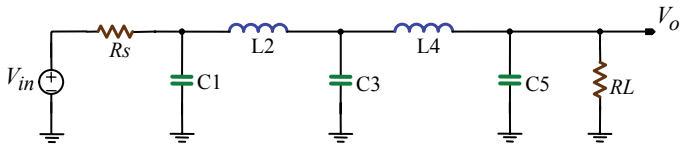

- Design:
  - Filter tables
    - A. Zverev, *Handbook of filter synthesis*, Wiley, 1967.
    - A. B. Williams and F. J. Taylor, *Electronic filter design*, 3rd edition, McGraw-Hill, 1995.
  - CAD tools
    - Matlab
    - Spice

LC Ladder Filter Design Example

Design a LPF with maximally flat passband:

f-3dB = 10MHz, f_{stop} = 20MHz

Rs >27dB

- Maximally flat passband ⇨ Butterworth
  - Find minimum filter order :
    - Use of Matlab
    - or Tables
  - Here tables used

f_{stop} / f_{-3dB} = 2

Rs >27dB

Minimum Filter Order

⇨5th order Butterworth

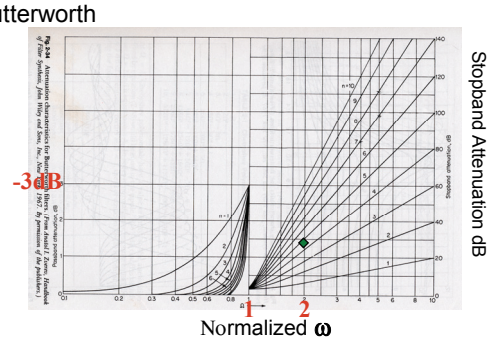

Normalized ω

From: Williams and Taylor, p. 2-37

LC Ladder Filter Design Example

Find values for L & C from Table:

Note L &C values normalized to

ω_{-3dB} =1

Denormalization:

Multiply all L_{Norm}, C_{Norm} by:

$L_r = R/\omega_{-3dB}$

$C_r = 1/(R X \omega_{-3dB})$

R is the value of the source and termination resistor (choose both 1Ω for now)

Then: $L = L_r \times L_{Norm}$

$C = C_r \times C_{Norm}$

NORMALIZED FILTER DESIGN TABLES 11.3

TABLE 11-2 Butterworth *LC* Element Values (*Continued*)

n	R_s	C_1	L_2	C_3	L_4	C_5	L_6	C_7
5	1.0000	0.6180	1.6180	2.0000	1.6180	0.6180		
	0.9000	0.4416	1.0265	1.9095	1.7562	1.3887		
	0.8000	0.4698	0.8660	2.0605	1.5443	1.7380		
	0.7000	0.5173	0.7313	2.2849	1.3326	2.1083		
	0.6000	0.5860	0.6094	2.5998	1.1255	2.5524		
	0.5000	0.6857	0.4955	3.0510	0.9237	3.1331		
	0.4000	0.8378	0.3877	3.7357	0.7274	3.9648		
	0.3000	1.0937	0.2848	4.8835	0.5367	5.3073		
	0.2000	1.6077	0.1861	7.1849	0.3518	7.9345		
	0.1000	3.1522	0.0912	14.0945	0.1727	15.7103		
	Inf.	1.5451	1.6944	1.3820	0.8944	0.3090		
6	1.0000	0.5176	1.4142	1.9319	1.9319	1.4142	0.5176	
	1.1111	0.2890	1.0403	1.3217	2.0539	1.7443	1.3347	
	1.2500	0.2445	1.1163	1.1257	2.2389	1.5498	1.6881	
	1.4286	0.2072	1.2363	0.9567	2.4991	1.3464	2.0618	
	1.6667	0.1732	1.4071	0.8011	2.8580	1.1431	2.5092	
	2.0000	0.1412	1.6531	0.6542	3.3687	0.9423	3.0938	
	2.5000	0.1108	2.0275	0.5139	4.1408	0.7450	3.9305	
	3.3333	0.0816	2.6559	0.3788	5.4325	0.5517	5.2804	
	5.0000	0.0535	3.9170	0.2484	8.0201	0.3628	7.9216	
	10.0000	0.0265	7.7053	0.1222	15.7855	0.1788	15.7375	
	Inf.	1.5529	1.7593	1.5529	1.2016	0.7579	0.2588	
7	1.0000	0.4450	1.2470	1.8019	2.0000	1.8019	1.2470	0.4450
	0.9000	0.2985	0.7111	1.4043	1.4891	2.1249	1.7268	1.2961
	0.8000	0.3215	0.6057	1.5174	1.2777	2.3338	1.5461	1.6520
	0.7000	0.3571	0.5154	1.6883	1.0910	2.6177	1.3498	2.0277
	0.6000	0.4075	0.4322	1.9284	0.9170	3.0050	1.1503	2.4771
	0.5000	0.4799	0.3536	2.2726	0.7512	3.5532	0.9513	3.0640
	0.4000	0.5899	0.2782	2.7950	0.5917	4.3799	0.7542	3.9037
	0.3000	0.7745	0.2055	3.6706	0.4373	5.7612	0.5600	5.2583
	0.2000	1.1448	0.1350	5.4267	0.2874	8.5263	0.3692	7.9079
	0.1000	2.2571	0.0665	10.7004	0.1417	16.8222	0.1823	15.7480
	Inf.	1.5576	1.7988	1.6588	1.3972	1.0550	0.6560	0.2225
n	$1/R_s$	L_1	C_2	L_3	C_4	L_5	C_6	L_7

From: Williams and Taylor, p. 11.3

LC Ladder Filter Design Example

Find values for L & C from Table:

Normalized values:

$C1_{Norm} = C5_{Norm} = 0.618$

$C3_{Norm} = 2.0$

$L2_{Norm} = L4_{Norm} = 1.618$

Denormalization:

Since $\omega_{-3dB} = 2\pi \times 10MHz$

$L_r = R/\omega_{-3dB} = 15.9$ nH

$C_r = 1/(R \times \omega_{-3dB}) = 15.9$ nF

$R = 1$

⇨ C1=C5=9.836nF, C3=31.83nF

⇨ L2=L4=25.75nH

NORMALIZED FILTER DESIGN TABLES 11.3

TABLE 11-2 Butterworth *LC* Element Values (*Continued*)

n	R_s	C_1	L_2	C_3	L_4	C_5	L_6	C_7
5	1.0000	0.6180	1.6180	2.0000	1.6180	0.6180		
	0.9000	0.4416	1.0265	1.9095	1.7562	1.3887		
	0.8000	0.4698	0.8660	2.0605	1.5443	1.7380		
	0.7000	0.5175	0.7313	2.2849	1.3326	2.1083		
	0.6000	0.5860	0.6094	2.5998	1.1255	2.5524		
	0.5000	0.6857	0.4955	3.0510	0.9237	3.1331		
	0.4000	0.8378	0.3877	3.7357	0.7274	3.9648		
	0.3000	1.0937	0.2848	4.8835	0.5367	5.3073		
	0.2000	1.6077	0.1861	7.1849	0.3518	7.9345		
	0.1000	3.1522	0.0912	14.0945	0.1727	15.7103		
	Inf.	1.5451	1.6944	1.3820	0.8944	0.3090		
6	1.0000	0.5176	1.4142	1.9319	1.9319	1.4142	0.5176	
	1.1111	0.2890	1.0403	1.3217	2.0539	1.7443	1.3347	
	1.2500	0.2445	1.1163	1.1257	2.2389	1.5498	1.6881	
	1.4286	0.2072	1.2363	0.9567	2.4991	1.3464	2.0618	
	1.6667	0.1732	1.4071	0.8011	2.8580	1.1431	2.5092	
	2.0000	0.1412	1.6531	0.6542	3.3687	0.9423	3.0938	
	2.5000	0.1108	2.0275	0.5139	4.1408	0.7450	3.9305	
	3.3333	0.0816	2.6559	0.3788	5.4325	0.5517	5.2804	
	5.0000	0.0535	3.9170	0.2484	8.0201	0.3628	7.9216	
	10.0000	0.0263	7.7053	0.1222	15.7855	0.1788	15.7375	
	Inf.	1.5529	1.7593	1.5529	1.2016	0.7579	0.2588	
7	1.0000	0.4450	1.2470	1.8019	2.0000	1.8019	1.2470	0.4450
	0.9000	0.2985	0.7111	1.4043	1.4891	2.1249	1.7268	1.2961
	0.8000	0.3215	0.6057	1.5174	1.2777	2.3338	1.5461	1.6520
	0.7000	0.3571	0.5154	1.6883	1.0910	2.6177	1.3498	2.0277
	0.6000	0.4075	0.4322	1.9284	0.9170	3.0050	1.1503	2.4771
	0.5000	0.4799	0.3536	2.2726	0.7512	3.5532	0.9513	3.0640
	0.4000	0.5899	0.2782	2.7950	0.5917	4.3799	0.7542	3.9037
	0.3000	0.7745	0.2055	3.6706	0.4373	5.7612	0.5600	5.2583
	0.2000	1.1448	0.1350	5.4267	0.2874	8.5263	0.3692	7.9079
	0.1000	2.2571	0.0665	10.7004	0.1417	16.8222	0.1825	15.7480
	Inf.	1.5576	1.7988	1.6588	1.3972	1.0550	0.6560	0.2225
n	$1/R_s$	L_1	C_2	L_3	C_4	L_5	C_6	L_7

From: Williams and Taylor, p. 11.3

Last Lecture: Example: 5th Order Butterworth Filter

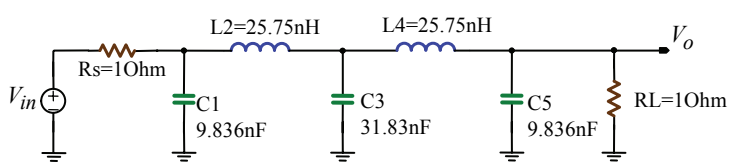

Specifications:

f-3dB = 10MHz,

fstop = 20MHz

Rs >27dB

Used filter tables to obtain Ls & Cs

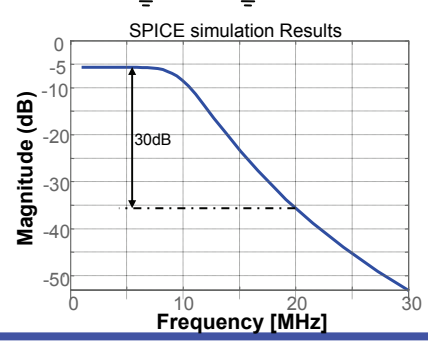

Low-Pass RLC Ladder Filter
Conversion to Integrator Based Active Filter

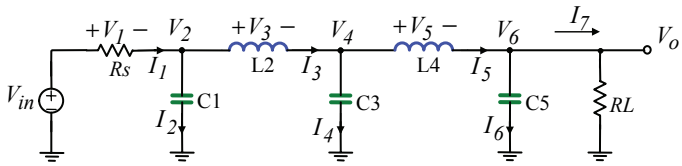

- Use KCL & KVL to derive equations:

$$V_1 = V_{in} - V_2 \;,\; V_2 = \frac{I_2}{sC_1} \;,\; V_3 = V_2 - V_4$$

$$V_4 = \frac{I_4}{sC_3} \;,\; V_5 = V_4 - V_6 \;,\; V_6 = \frac{I_6}{sC_5} \quad V_o = V_6$$

$$I_1 = \frac{V_1}{Rs} \;,\; I_2 = I_1 - I_3 \;,\; I_3 = \frac{V_3}{sL_2}$$

$$I_4 = I_3 - I_5 \;,\; I_5 = \frac{V_5}{sL_4} \;,\; I_6 = I_5 - I_7 \;,\; I_7 = \frac{V_6}{RL}$$

Low-Pass RLC Ladder Filter
Signal Flowgraph

$$V_1 = V_{in} - V_2 \;,\; V_2 = \frac{I_2}{sC_1} \;,\; V_3 = V_2 - V_4$$

$$V_4 = \frac{I_4}{sC_3} \;,\; V_5 = V_4 - V_6 \;,\; V_6 = \frac{I_6}{sC_5} \quad V_o = V_6$$

$$I_1 = \frac{V_1}{Rs} \;,\; I_2 = I_1 - I_3 \;,\; I_3 = \frac{V_3}{sL_2}$$

$$I_4 = I_3 - I_5 \;,\; I_5 = \frac{V_5}{sL_4} \;,\; I_6 = I_5 - I_7 \;,\; I_7 = \frac{V_6}{RL}$$

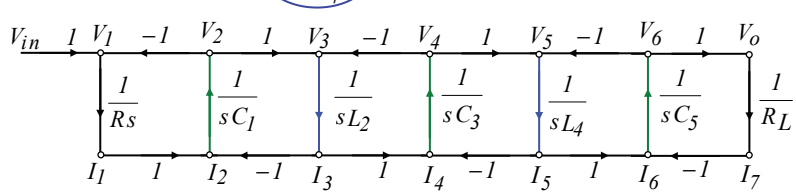

SFG

Low-Pass RLC Ladder Filter
Signal Flowgraph

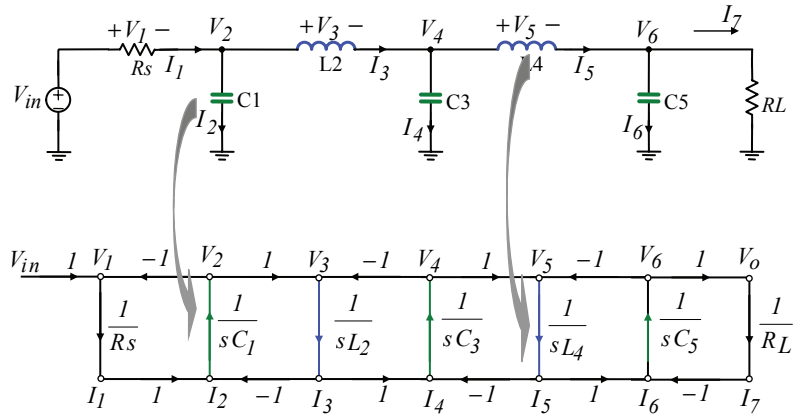

SFG

Low-Pass RLC Ladder Filter
Normalize

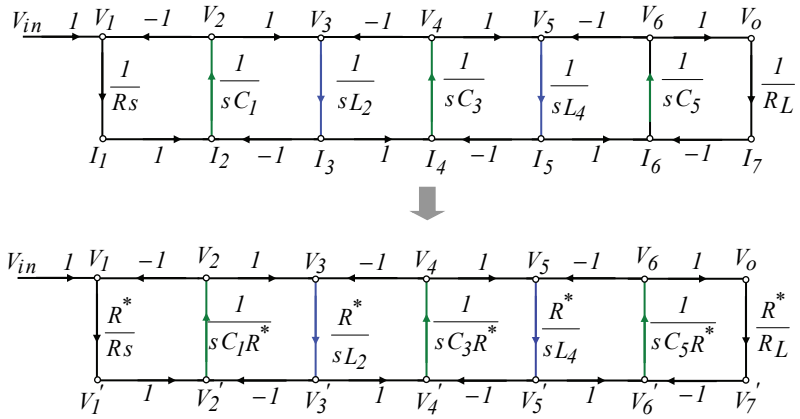

Low-Pass RLC Ladder Filter Synthesize

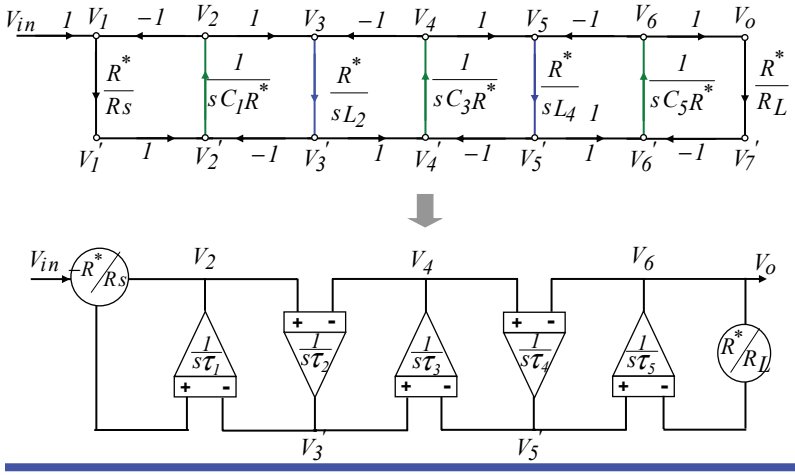

Low-Pass RLC Ladder Filter Integrator Based Implementation

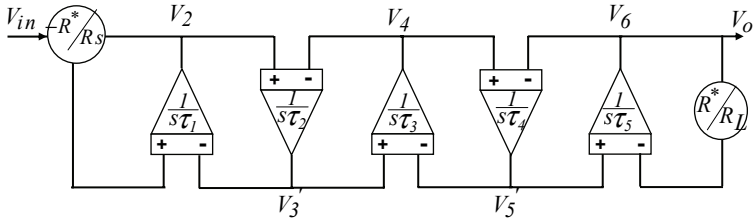

$$\tau_1 = C_1.R^* \quad , \quad \tau_2 = \frac{L_2}{R^*} = C_2.R^* \quad , \quad \tau_3 = C_3.R^* \quad , \quad \tau_4 = \frac{L4}{R^*} = C_4.R^* \quad , \quad \tau_5 = C_5.R^*$$

Building Block:
RC Integrator

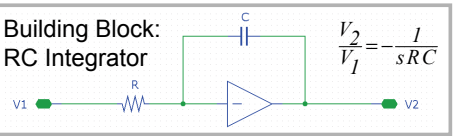

$$\frac{V_2}{V_1} = -\frac{1}{sRC}$$

Negative Resistors

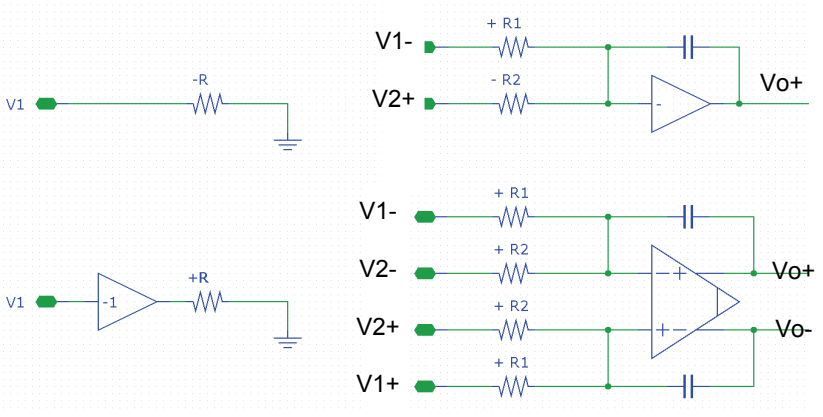

Integrator Based Implementation of LP Ladder Filter Synthesize

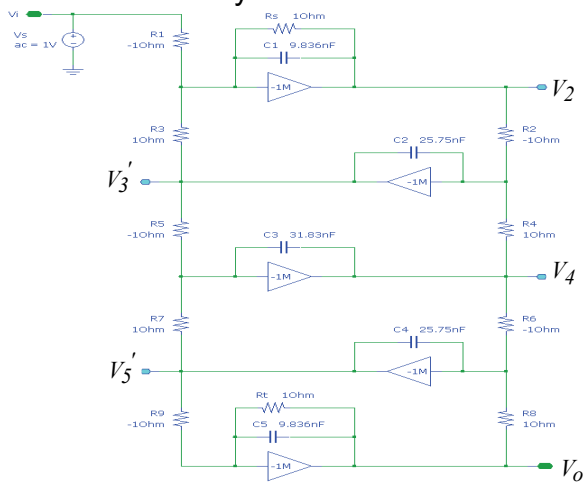

Frequency Response

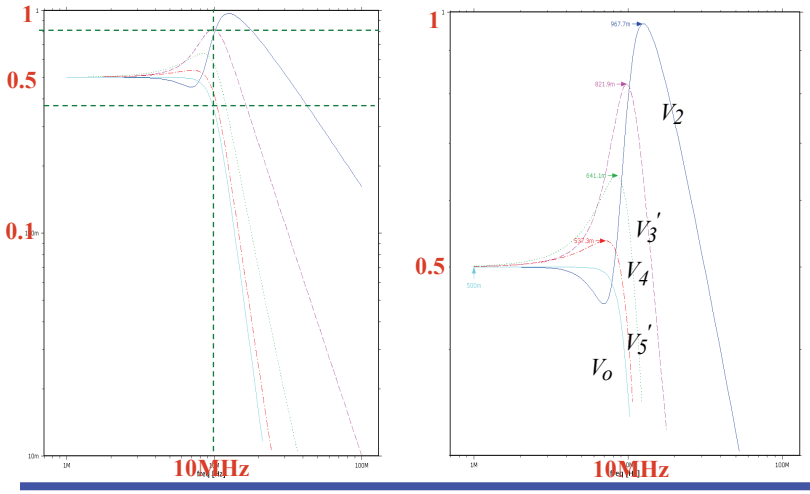

Scale Node Voltages

Scale V_o by factor "s"

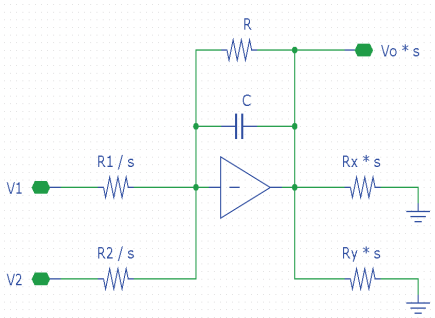

Node Scaling

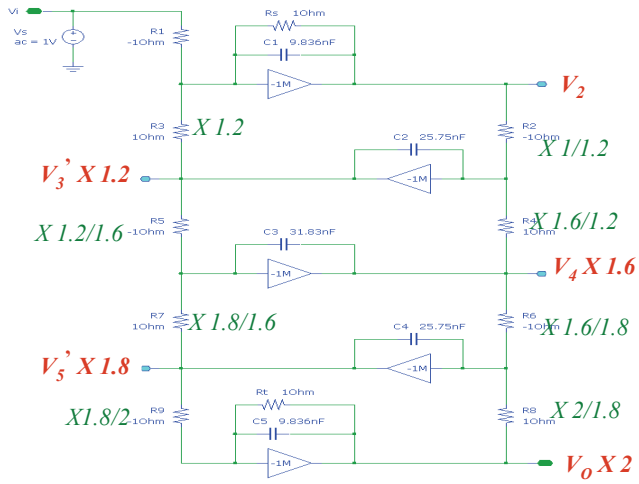

Maximizing Signal Handling by Node Voltage Scaling

Before Node Scaling

After Node Scaling

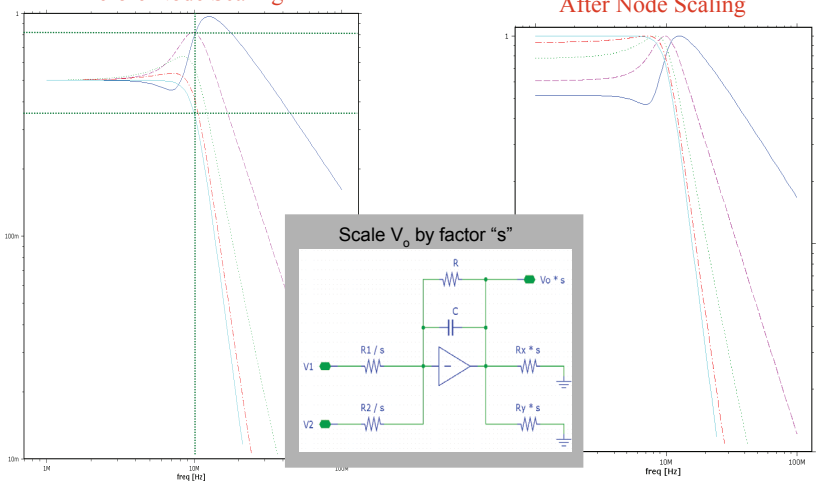

Filter Noise

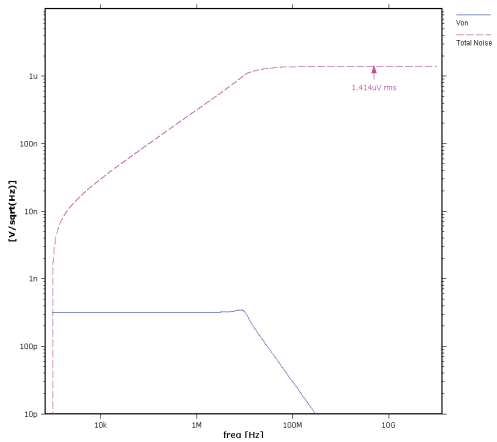

Total noise @ the output: 1.4 µV rms (noiseless opamps)

That's excellent, but the capacitors are very large (and the resistors small → high power dissipation). Not possible to integrate.

Suppose our application allows higher noise in the order of 140 µV rms …

Scale to Meet Noise Target

Scale capacitors and resistors to meet noise objective

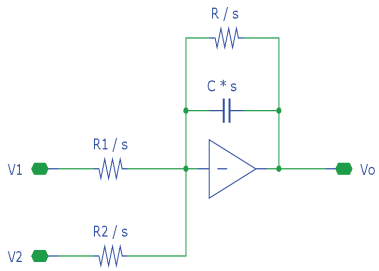

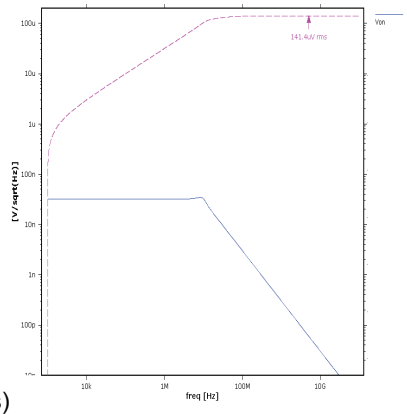

$s = 10^{-4}$

Noise: 141 µV rms (noiseless opamps)

Completed Design

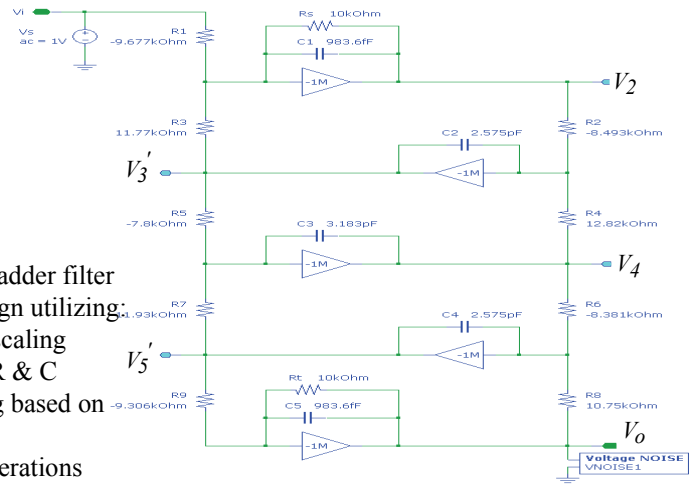

5th order ladder filter
Final design utilizing:
- -Node scaling
- -Final R & C scaling based on noise considerations

Sensitivity

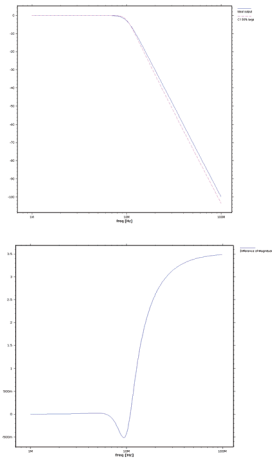

- C_1 made (arbitrarily) 50% (!) larger than its nominal value
- 0.5 dB error at band edge
- 3.5 dB error in stopband
- Looks like <u>very low sensitivity</u>

Differential 5th Order Lowpass Filter

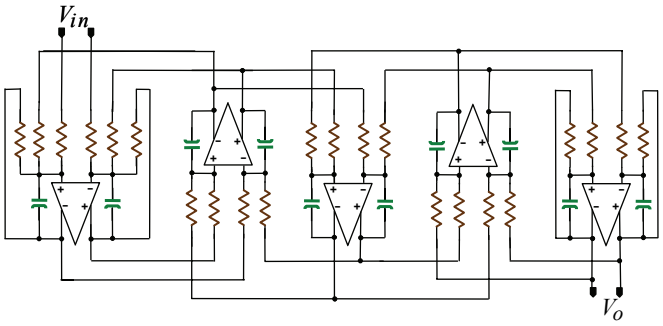

- Since each signal and its inverse readily available, eliminates the need for negative resistors!
- Differential design has the advantage of even order harmonic distortion components and common mode spurious pickup automatically cancels
- Disadvantage: Double resistor and capacitor area!

RLC Ladder Filters Including Transmission Zeros

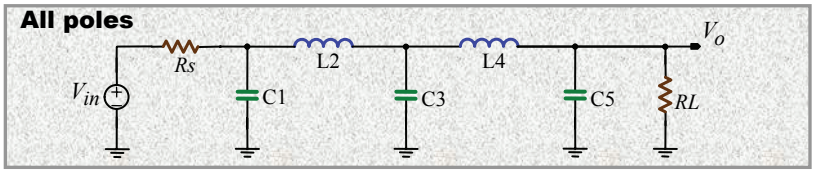

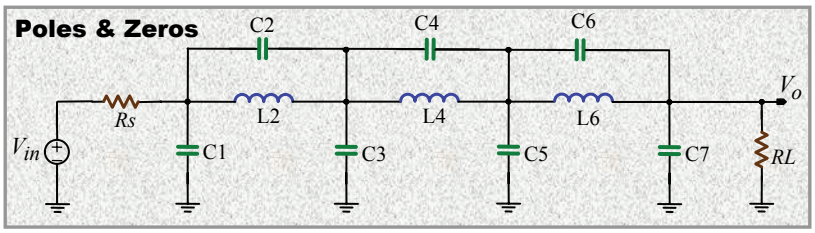

RLC Ladder Filter Design Example

- Design a baseband filter for CDMA IS95 cellular phone receive path with the following specs.
  - Filter frequency mask shown on the next page
  - Allow enough margin for manufacturing variations
    - Assume pass-band magnitude variation of 1.8dB
    - Assume the -3dB frequency can vary by +-8% due to manufacturing tolerances & circuit inaccuracies
  - Assume any phase impairment can be compensated in the digital domain

* Note this is the same example as for cascade of biquad while the specifications are given closer to a real product case

RLC Ladder Filter Design Example CDMA IS95 Receive Filter Frequency Mask

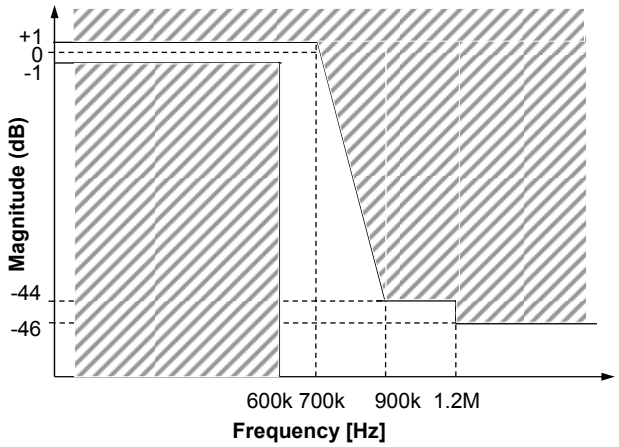

RLC Ladder Filter Design
Example: CDMA IS95 Receive Filter

- Since phase impairment can be corrected for, use filter type with max. roll-off slope/pole
  → Filter type → Elliptic
- Design filter freq. response to fall well within the freq. mask
  – Allow margin for component variations & mismatches
- For the passband ripple, allow enough margin for ripple change due to component & temperature variations
  → Design nominal passband ripple of 0.2dB
- For stopband rejection add a few dB margin 44+5=49dB
- Final design specifications:
  – fpass = 650 kHz Rpass = 0.2 dB
  – fstop = 750 kHz Rstop = 49 dB
- Use Matlab or filter tables to decide the min. order for the filter (same as cascaded biquad example)
  – 7th Order Elliptic

RLC Low-Pass Ladder Filter Design
Example: CDMA IS95 Receive Filter

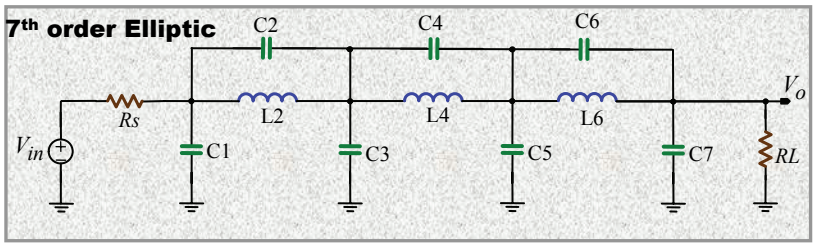

- Use filter tables to determine LC values

RLC Ladder Filter Design
Example: CDMA IS95 Receive Filter

- Specifications
  - fpass = 650 kHz Rpass = 0.2 dB
  - fstop = 750 kHz Rstop = 49 dB
- Use filter tables to determine LC values
  - Table from: A. Zverev, *Handbook of filter synthesis*, Wiley, 1967
  - Elliptic filters tabulated wrt "reflection coeficient ρ"

$$Rpass = -10 \times log\left(1 - \rho^2\right)$$

  - Since *Rpass=0.2dB* → ρ =20%
  - Use table accordingly

RLC Ladder Filter Design
Example: CDMA IS95 Receive Filter

- Table from Zverev book page #281 & 282:
- Since our spec. is Amin=44dB add 5dB margin & design for Amin=49dB

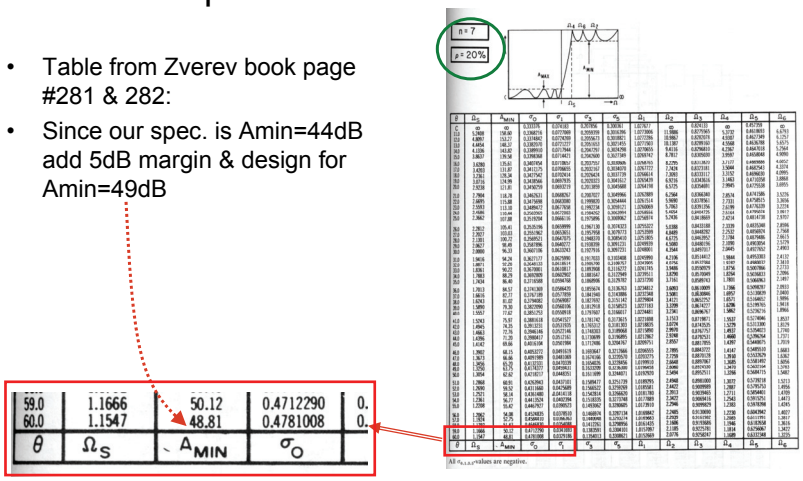

θ	Ω_S	A_{MIN}	σ_O
59.0	1.1666	50.12	0.4712290
60.0	1.1547	48.81	0.4781008

- Table from Zverev page #281 & 282:
- Normalized component values:
  - C1=1.17677
  - C2=0.19393
  - L2=1.19467
  - C3=1.51134
  - C4=1.01098
  - L4=0.72398
  - C5=1.27776
  - C6=0.71211
  - L6=0.80165
  - C7=0.83597

	$K^2 = 1.0$									
θ	C_1	C_2	L_2	C_3	C_4	L_4	C_5	C_6	L_6	C_7
C	1.335	0.00000	1.389	2.240	0.00000	1.515	2.240	0.00000	1.389	1.335
11.0	1.33064	0.00503	1.38316	2.21490	0.02330	1.48669	2.20558	0.01637	1.36926	1.31941
12.0	1.32982	0.00599	1.38214	2.21011	0.02777	1.48125	2.19903	0.01952	1.36559	1.31645
13.0	1.32892	0.00704	1.38102	2.20491	0.03264	1.47534	2.19192	0.02295	1.36161	1.31323
14.0	1.32794	0.00818	1.37982	2.19929	0.03792	1.46897	2.18424	0.02667	1.35731	1.30975
15.0	1.32690	0.00941	1.37852	2.19327	0.04362	1.46213	2.17601	0.03068	1.35269	1.30600
16.0	1.32577	0.01072	1.37712	2.18683	0.04973	1.45484	2.16721	0.03499	1.34775	1.30200
17.0	1.32457	0.01213	1.37564	2.17999	0.05627	1.44708	2.15786	0.03959	1.34249	1.29774
18.0	1.32330	0.01362	1.37406	2.17273	0.06323	1.43886	2.14796	0.04451	1.33691	1.29321
19.0	1.32194	0.01521	1.37238	2.16507	0.07063	1.43019	2.13750	0.04973	1.33100	1.28841
20.0	1.32051	0.01689	1.37061	2.15700	0.07848	1.42107	2.12649	0.05527	1.32478	1.28336
21.0	1.31900	0.01866	1.36874	2.14852	0.08677	1.41149	2.11493	0.06113	1.31823	1.27803
22.0	1.31741	0.02054	1.36677	2.13964	0.09552	1.40147	2.10283	0.06732	1.31137	1.27244
23.0	1.31574	0.02250	1.36470	2.13035	0.10474	1.39100	2.09018	0.07384	1.30418	1.26658
24.0	1.31398	0.02457	1.36253	2.12066	0.11443	1.38009	2.07699	0.08071	1.29666	1.26045
25.0	1.31215	0.02674	1.36026	2.11057	0.12461	1.36874	2.06327	0.08792	1.28882	1.25405
26.0	1.31022	0.02901	1.35788	2.10008	0.13529	1.35695	2.04901	0.09549	1.28066	1.24738
27.0	1.30822	0.03138	1.35540	2.08919	0.14648	1.34473	2.03422	0.10343	1.27218	1.24044
28.0	1.30612	0.03386	1.35281	2.07790	0.15820	1.33207	2.01890	0.11174	1.26336	1.23322
29.0	1.30394	0.03645	1.35012	2.06621	0.17045	1.31899	2.00305	0.12044	1.25423	1.22572
30.0	1.30167	0.03914	1.34731	2.05413	0.18325	1.30549	1.98669	0.12954	1.24476	1.21794
31.0	1.29930	0.04196	1.34439	2.04165	0.19663	1.29156	1.96980	0.13905	1.23497	1.20988
32.0	1.29684	0.04488	1.34136	2.02878	0.21059	1.27722	1.95241	0.14898	1.22485	1.20154
33.0	1.29429	0.04793	1.33821	2.01552	0.22516	1.26247	1.93450	0.15935	1.21440	1.19291
34.0	1.29164	0.05109	1.33494	2.00187	0.24036	1.24730	1.91609	0.17017	1.20362	1.18399
35.0	1.28889	0.05438	1.33155	1.98782	0.25621	1.23173	1.89717	0.18146	1.19250	1.17479
36.0	1.28603	0.05780	1.32803	1.97339	0.27274	1.21576	1.87776	0.19323	1.18106	1.16529
37.0	1.28307	0.06135	1.32439	1.95857	0.28998	1.19939	1.85786	0.20551	1.16928	1.15549
38.0	1.28001	0.06504	1.32062	1.94336	0.30794	1.18263	1.83747	0.21832	1.15716	1.14539
39.0	1.27683	0.06887	1.31671	1.92777	0.32668	1.16548	1.81659	0.23168	1.14471	1.13499
40.0	1.27355	0.07284	1.31267	1.91179	0.34622	1.14795	1.79524	0.24560	1.13192	1.12428
41.0	1.27014	0.07696	1.30849	1.89542	0.36660	1.13003	1.77342	0.26013	1.11879	1.11326
42.0	1.26662	0.08123	1.30416	1.87867	0.38787	1.11174	1.75113	0.27529	1.10532	1.10192
43.0	1.26297	0.08566	1.29969	1.86154	0.41006	1.09308	1.72837	0.29110	1.09151	1.09026
44.0	1.25920	0.09026	1.29506	1.84403	0.43324	1.07406	1.70517	0.30761	1.07735	1.07828
45.0	1.25529	0.09504	1.29027	1.82614	0.45746	1.05467	1.68151	0.32484	1.06285	1.06596
46.0	1.25125	0.09999	1.28532	1.80786	0.48277	1.03493	1.65741	0.34285	1.04799	1.05331
47.0	1.24707	0.10513	1.28020	1.78920	0.50926	1.01484	1.63287	0.36167	1.03278	1.04032
48.0	1.24274	0.11046	1.27491	1.77015	0.53699	0.99439	1.60791	0.38135	1.01722	1.02697
49.0	1.23826	0.11600	1.26943	1.75073	0.56606	0.97361	1.58252	0.40196	1.00131	1.01327
50.0	1.23362	0.12175	1.26377	1.73092	0.59655	0.95250	1.55672	0.42354	0.98503	0.99920
51.0	1.22882	0.12772	1.25791	1.71072	0.62857	0.93105	1.53051	0.44616	0.96839	0.98475
52.0	1.22385	0.13394	1.25184	1.69014	0.66223	0.90927	1.50390	0.46990	0.95138	0.96992
53.0	1.21869	0.14040	1.24556	1.66917	0.69768	0.88718	1.47690	0.49484	0.93401	0.95470
54.0	1.21335	0.14712	1.23906	1.64782	0.73505	0.86477	1.44952	0.52106	0.91626	0.93907
55.0	1.20781	0.15412	1.23233	1.62607	0.77452	0.84205	1.42177	0.54868	0.89813	0.92302
56.0	1.20207	0.16141	1.22534	1.60392	0.81628	0.81902	1.39365	0.57779	0.87962	0.90654
57.0	1.19610	0.16902	1.21810	1.58138	0.86054	0.79570	1.36518	0.60854	0.86072	0.88961
58.0	1.18991	0.17696	1.21058	1.55844	0.90754	0.77208	1.33637	0.64106	0.84143	0.87222
59.0	1.18347	0.18526	1.20278	1.53510	0.95750	0.74817	1.30725	0.67552	0.82174	0.85435
60.0	1.17677	0.19393	1.19467	1.51134	1.01098	0.72398	1.27776	0.71211	0.80165	0.83597
θ	L_1	L_2	C_2	L_3	L_4	C_4	L_5	L_6	C_6	L_7

RLC Filter Frequency Response

- Frequency mask superimposed
- Frequency response well within spec.

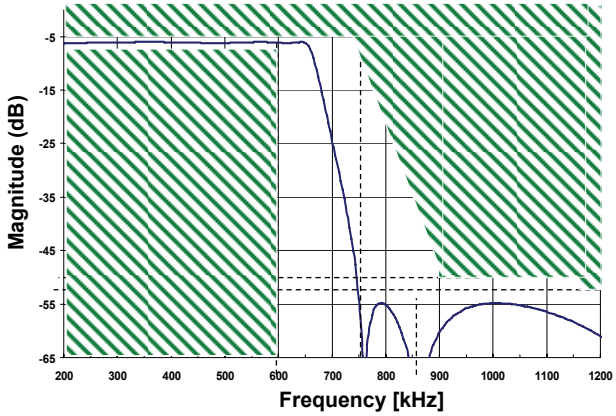

Passband Detail

- Passband well within spec.

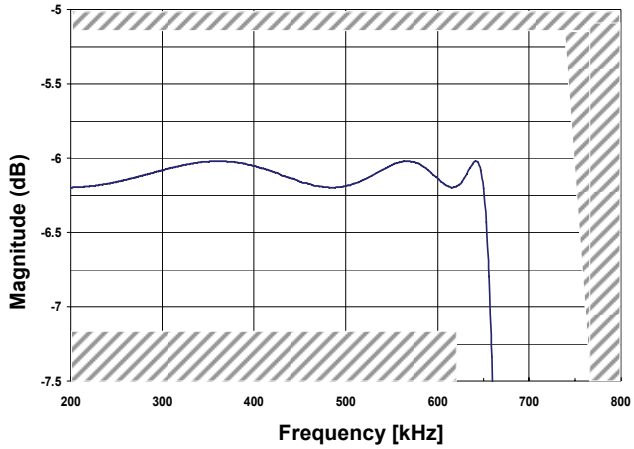

RLC Ladder Filter Sensitivity

- The design has the same specifications as the previous example implemented with cascaded biquads
- To compare the sensitivity of RLC ladder versus cascaded-biquads:
  - Changed all Ls &Cs one by one by 2% in order to change the pole/zeros by 1% (similar test as for cascaded biquad)
  - Found frequency response → most sensitive to L4 variations
  - Note that by varying L4 both poles & zeros are varied

RCL Ladder Filter Sensitivity

Component mismatch in RLC filter:

- Increase L4 from its nominal value by 2%
- Decrease L4 by 2%

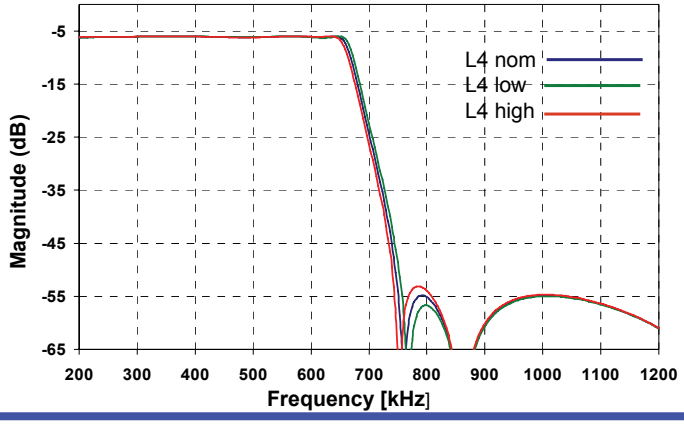

RCL Ladder Filter Sensitivity

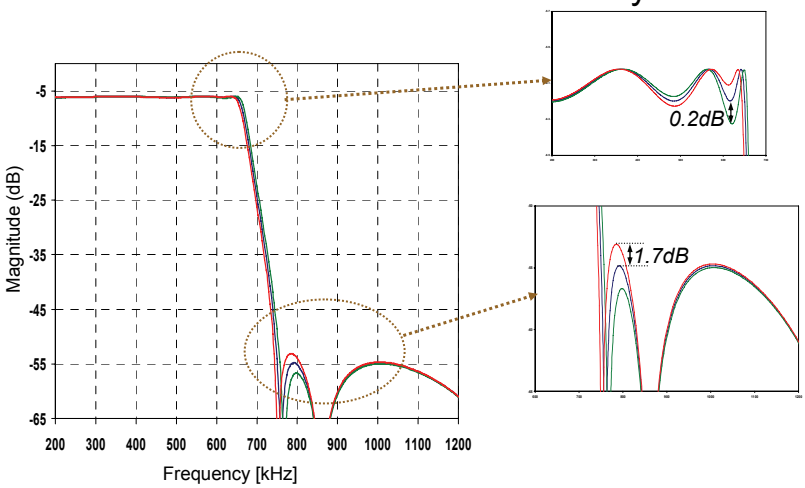

Sensitivity of Cascade of Biquads

Component mismatch in Biquad 4 (highest Q pole):

- Increase ω_{p4} by 1%
- Decrease ω_{z4} by 1%

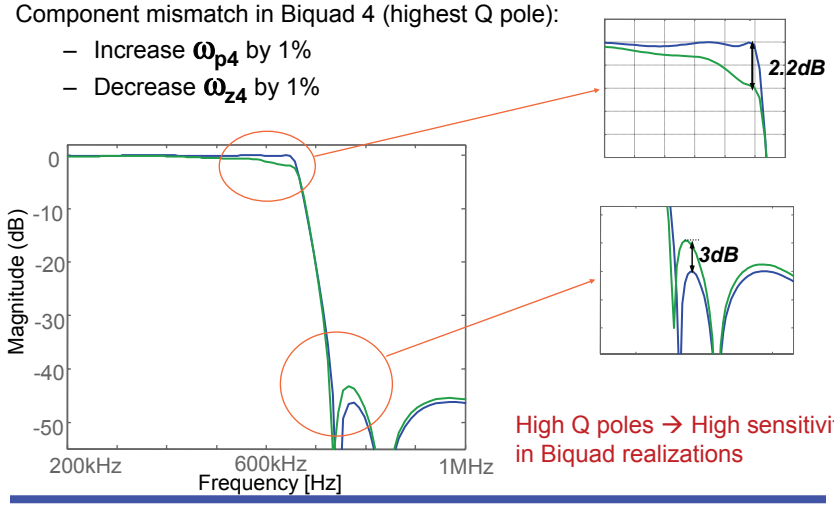

High Q poles → High sensitivity in Biquad realizations

Sensitivity Comparison for Cascaded-Biquads versus RLC Ladder

- 7th Order elliptic filter
  - 1% change in pole & zero pair

	Cascaded Biquad	**RLC Ladder**
Passband deviation	2.2dB (29%)	0.2dB (2%)
Stopband deviation	3dB (40%)	1.7dB (21%)

Doubly terminated LC ladder filters ⇨ Significantly lower sensitivity compared to cascaded-biquads particularly within the passband

RLC Ladder Filter Design
Example: CDMA IS95 Receive Filter

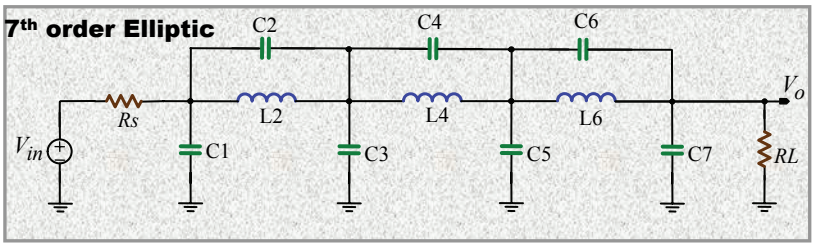

- Previously learned to design integrator based ladder filters without transmission zeros
  → Question:
  - How do we implement the transmission zeros in the integrator-based version?
  - Preferred method → no extra power dissipation → no active elements

Integrator Based Ladder Filters
How Do to Implement Transmission zeros?

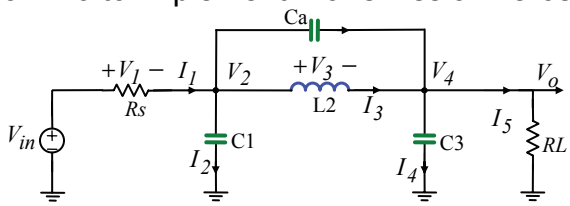

- Use KCL & KVL to derive :

$$I_2 = I_1 - I_3 - I_{C_a}, \quad I_{C_a} = (V_2 - V_4)sC_a, \quad V_2 = \frac{I_2}{sC_1}, \quad V_2 = \frac{I_1 - I_3 - I_{C_a}}{sC_1}$$

Substituting for I_{C_a} *and rearranging :*

$$\boxed{V_2 = \frac{I_1 - I_3}{s(C_1 + C_a)} + V_4 \times \frac{C_a}{C_1 + C_a}}$$

Integrator Based Ladder Filters
How Do to Implement Transmission zeros?

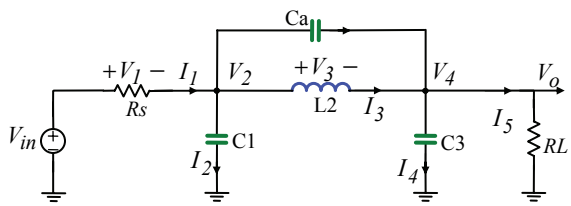

- Use KCL & KVL to derive :

$$V_2 = \frac{I_1 - I_3}{s(C_1 + C_a)} + V_4 \times \frac{C_a}{C_1 + C_a}$$

$$V_4 = \frac{I_3 - I_5}{s(C_3 + C_a)} + V_2 \times \frac{C_a}{C_3 + C_a}$$

Frequency independent constants Can be substituted by: Voltage-Controlled Voltage Source

Integrator Based Ladder Filters
Transmission zeros

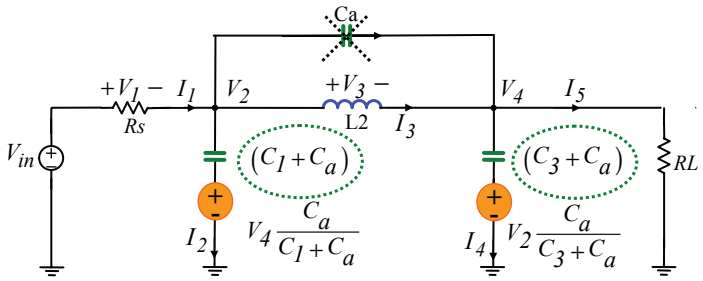

- Replace *shunt capacitors* with *voltage controlled voltage sources*:

$$V_2 = \frac{I_1 - I_3}{s(C_1 + C_a)} + V_4 \frac{C_a}{C_1 + C_a}$$

$$V_4 = \frac{I_3 - I_5}{s(C_3 + C_a)} + V_2 \frac{C_a}{C_3 + C_a}$$

3rd Order Lowpass Filter
All Poles & No Zeros

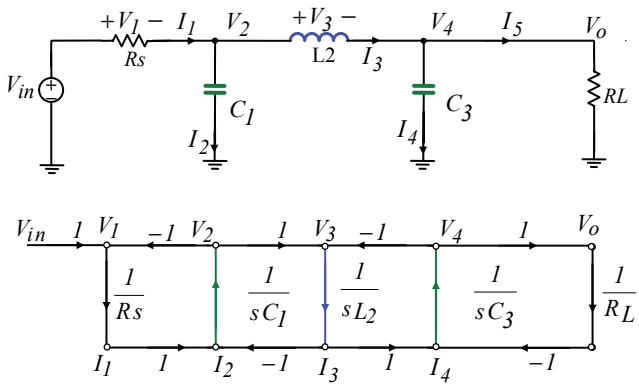

Transmission Zero Implementation
W/O Use of Active Elements

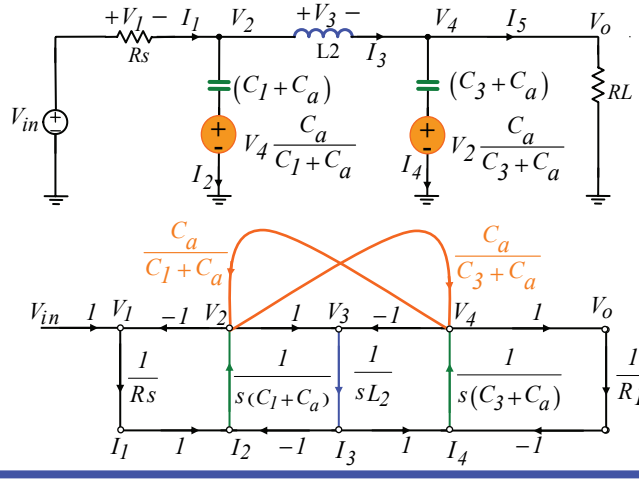

Integrator Based Ladder Filters

Higher Order Transmission zeros

Convert zero generating Cs in C loops to voltage-controlled voltage sources

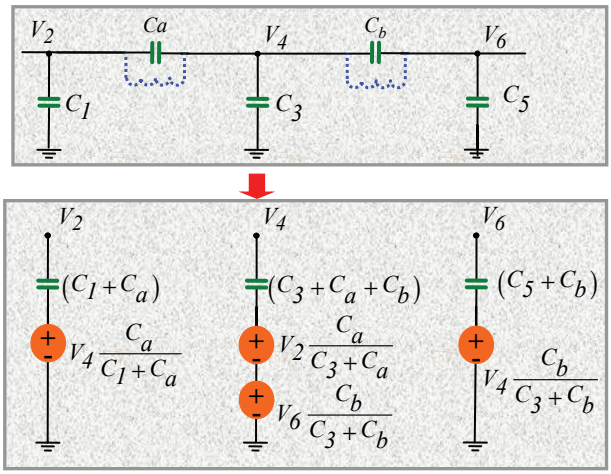

Higher Order Transmission zeros

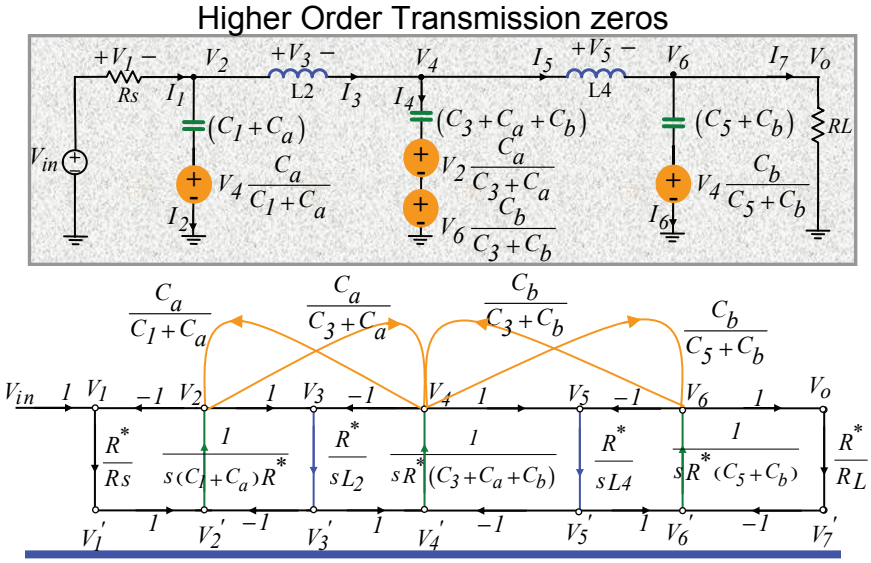

Example:
5th Order Chebyshev II Filter

11.112 CHAPTER ELEVEN

TABLE 11-57 Maximally Flat Delay with Chebyshev Stopband (*Continued*)

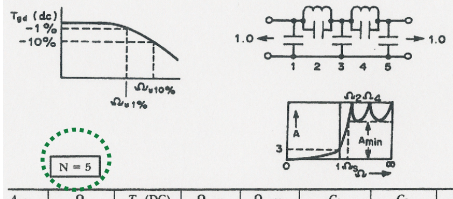

A_{min}	Ω_s	T_{gd}(DC)	$\Omega_{s\,1\%}$	$\Omega_{s\,10\%}$	C_1	C_2	L_2
34	2.6802	1.745	1.550	2.142	.02930	.3317	.3665
42	3.0263	1.904	1.408	1.968	.1338	.2216	.4381
50	3.4467	2.035	1.316	1.840	2.1836	.08543	.8830
58	3.9701	2.139	1.304	1.750	2.203	.06060	.9418
66	4.6213	2.218	1.215	1.688	2.218	.04274	.9872
70	5.0044	2.250	1.191	1.665	2.224	.03582	1.006

Ω_2	C_3	C_4	L_4	Ω_4	C_5
2.868	2.420	.07329	.5638	4.919	.1111
3.209	2.435	.05333	.6496	5.373	.1513
3.641	.5958	.08228	.3358	6.016	.07096
4.186	.6503	.05559	.3818	6.864	.1007
4.863	.6922	.03799	.4168	7.947	.1221
5.268	.7092	.03150	.4307	8.585	.1305

- 5th order Chebyshev II
- Table from: Williams & Taylor book, p. 11.112
- 50dB stopband attenuation
- f_{-3dB} *=10MHz*

Realization with Integrator

$$V_1 = \frac{1}{s(C_a + C_1)}\left[\frac{V_i - V_1}{R_s} - \frac{V_2}{R^*}\right] + \frac{C_a}{C_a + C_1} V_3$$

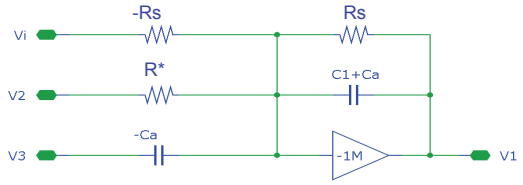

5th Order Butterworth Filter

From:
Lecture 4
page 14

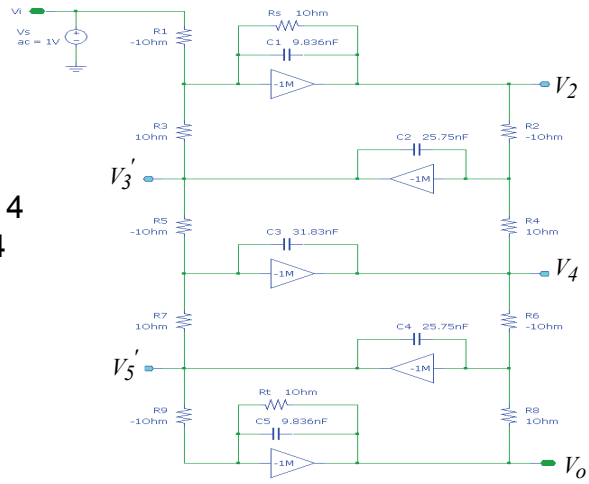

5th Order Chebyshev II Filter Opamp-RC Simulation

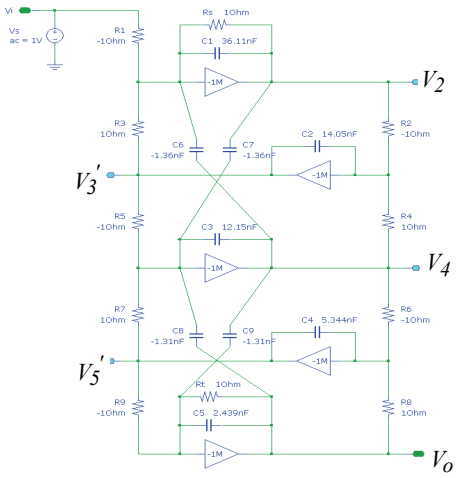

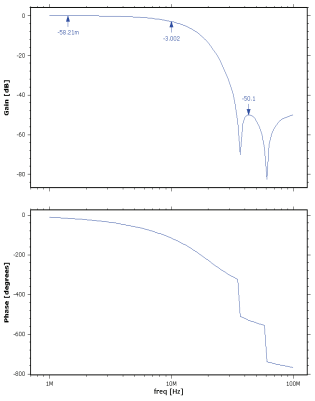

7th Order Differential Lowpass Filter Including Transmission Zeros

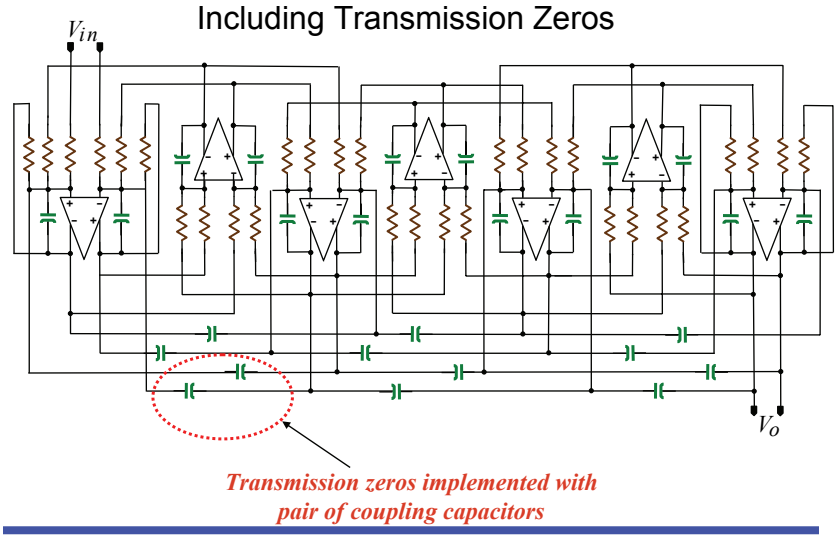

Effect of Integrator Non-Idealities on Filter Frequency Characteristics

- In the passive filter design (RLC filters) section:
  - Reactive element (L & C) non-idealities → expressed in the form of Quality Factor (Q)
  - Filter impairments due to component non-idealities explained in terms of component Q
- In the context of active filter design (integrator-based filters)
  - Integrator non-idealities → Translated to have form of Quality Factor (Q)
  - Filter impairments due to integrator non-idealities explained in terms of integrator Q

Effect of Integrator Non-Idealities on Filter Performance

- Ideal integrator characteristics
- Real integrator characteristics:
  - Effect of opamp finite DC gain
  - Effect of integrator non-dominant poles

Effect of Integrator Non-Idealities on Filter Performance
Ideal Integrator

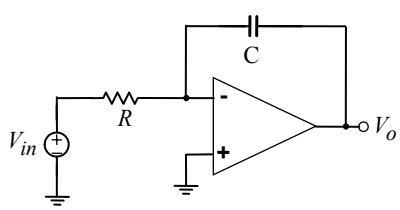

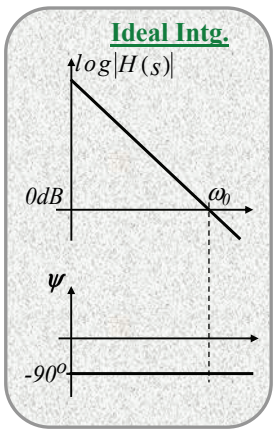

$Ideal\ \ opamp\ DC\ \ gain = \infty$

$Single\ pole\ @\ DC$

$\rightarrow no\ non\text{-}dominant\ poles$

$$H(s) = \frac{-\omega_0}{s}$$

$$\omega_0 = 1/RC$$

Ideal Integrator Quality Factor

Ideal intg. transfer function: $H(s) = \frac{-\omega_o}{s} = \frac{-\omega_o}{j\omega} = -\frac{1}{j\frac{\omega}{\omega_o}}$

Since component Q is defined as:: $\begin{cases} H(j\omega) = \frac{1}{R(\omega) + jX(\omega)} \\ Q = \frac{X(\omega)}{R(\omega)} \end{cases}$

Then: $\boxed{Q_{ideal}^{intg.} = \infty}$

Real Integrator Non-Idealities

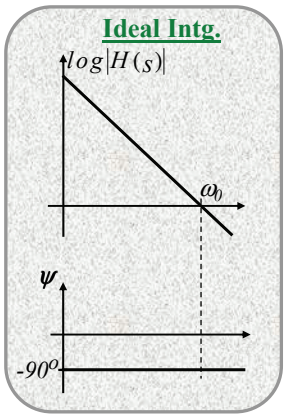

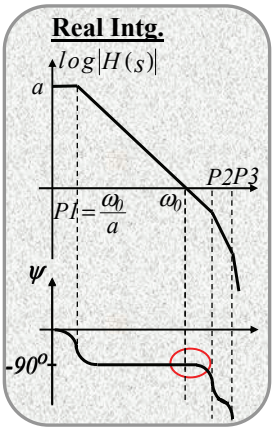

$H(s) = \frac{-\omega_o}{s}$

$H(s) \approx \frac{-a}{\left(1 + s\frac{a}{\omega_o}\right)\left(1 + \frac{s}{p2}\right)\left(1 + \frac{s}{p3}\right)\ldots}$

Effect of Integrator Finite DC Gain on Q

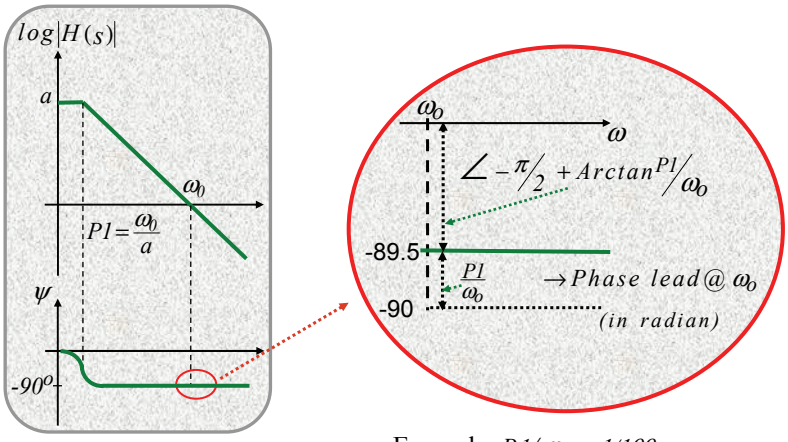

Example: $P1/\omega_0 = 1/100$

→ phase error ≅ $+0.5 degree$

Effect of Integrator Finite DC Gain on Q

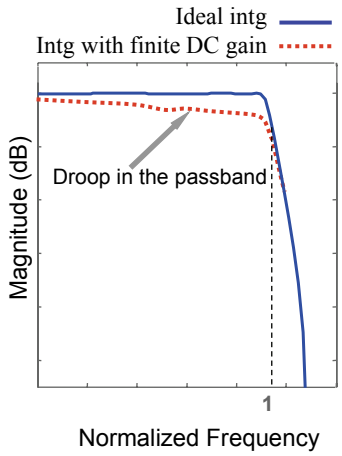

- Phase lead @ ω_0
  →Droop in the passband

Effect of Integrator Non-Dominant Poles

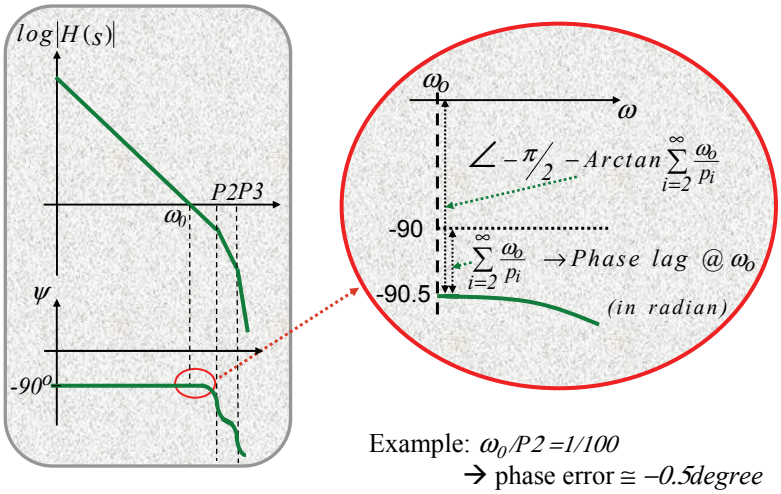

Example: $\omega_0/P2 = 1/100$

→ phase error ≅ $-0.5 degree$

Effect of Integrator Non-Dominant Poles

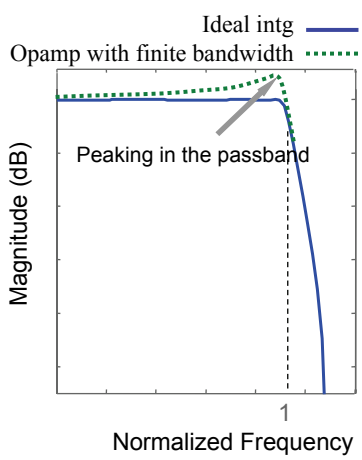

- Phase lag @ ω_0
  - →Peaking in the passband
    In extreme cases could result in oscillation!

Effect of Integrator Non-Dominant Poles & Finite DC Gain on Q

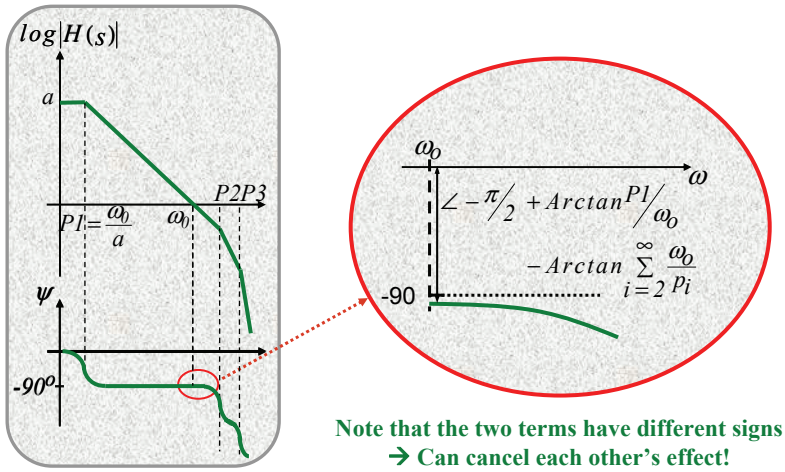

Note that the two terms have different signs
→ Can cancel each other's effect!

Integrator Quality Factor

Real intg. transfer function: $$H(s) \approx \frac{-a}{\left(1+s\frac{a}{\omega_0}\right)\left(1+\frac{s}{p2}\right)\left(1+\frac{s}{p3}\right)\ldots}$$

Based on the definition of Q and assuming that: $$\frac{\omega_0}{p_{2,3,\ldots}} << 1 \quad \& \quad a >> 1$$

It can be shown that <u>in the vicinity</u> of unity-gain-frequency:

$$Q_{real}^{intg.} \approx \frac{1}{\underbrace{\frac{1}{a}}_{\text{Phase lead @ } \omega_0} - \underbrace{\omega_0 \sum_{i=2}^{\infty} \frac{1}{p_i}}_{\text{Phase lag @ } \omega_0}}$$

Example:
Effect of Integrator Finite Q on Bandpass Filter Behavior

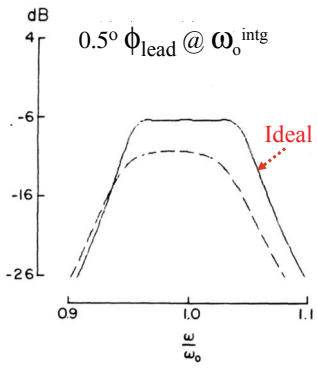

Integrator DC gain=*100*

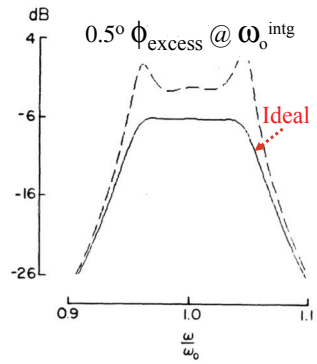

Integrator *P2 @ 100.* ω_o

Example:
Effect of Integrator Q on Filter Behavior

(0.5° ϕ_{lead} –0.5° ϕ_{excess}) @ ω_o^{intg}

→ ϕ_{error} @ ω_o^{intg} ~ 0

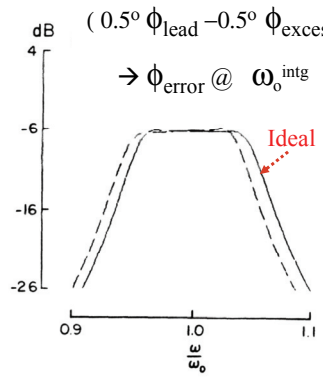

Integrator DC gain=*100* & *P2 @ 100.* ω_o

Summary

Effect of Integrator Non-Idealities on Q

$$Q_{ideal}^{intg.} = \infty$$

$$Q_{real}^{intg.} \approx \frac{1}{\frac{1}{a} - \omega_0 \sum_{i=2}^{\infty} \frac{1}{p_i}}$$

- Amplifier DC gain reduces the overall Q in the same manner as series/parallel resistance associated with passive elements
- Amplifier poles located above integrator unity-gain frequency enhance the *Q*!
  - If non-dominant poles close to unity-gain freq. → Oscillation
- Depending on the location of unity-gain-frequency, the two terms can cancel each other out!