EE C245 – ME C218 Introduction to MEMS Design Fall 2012

Prof. Clark T.-C. Nguyen

Dept. of Electrical Engineering & Computer Sciences
University of California at Berkeley
Berkeley, CA 94720

Lecture Module 2: Benefits of Scaling

Basic Concept: Scaling Guitar Strings

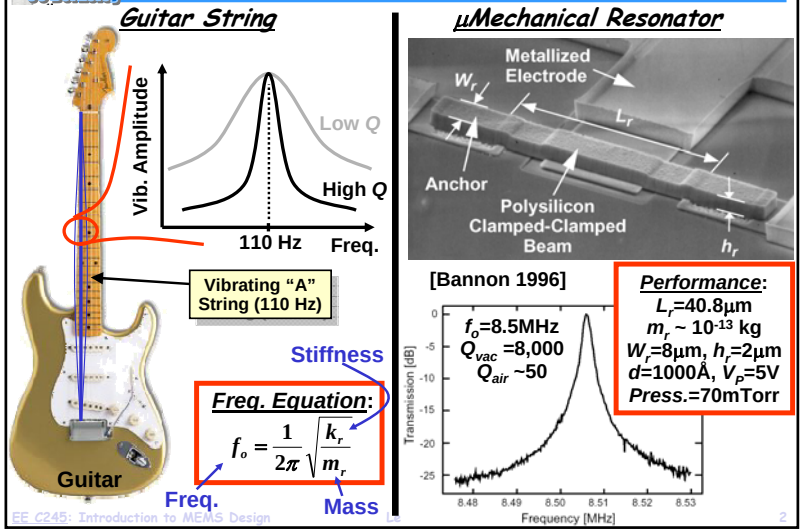

3CC 3λ/4 Bridged μMechanical Filter

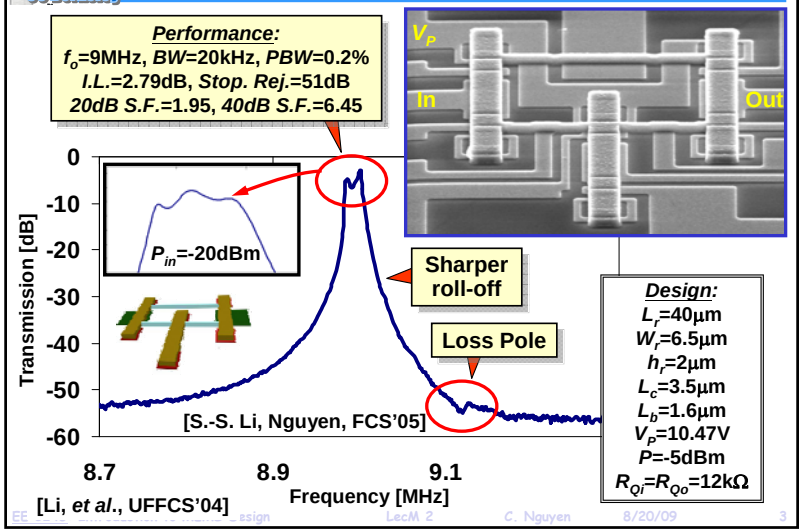

Micromechanical Filter Circuit

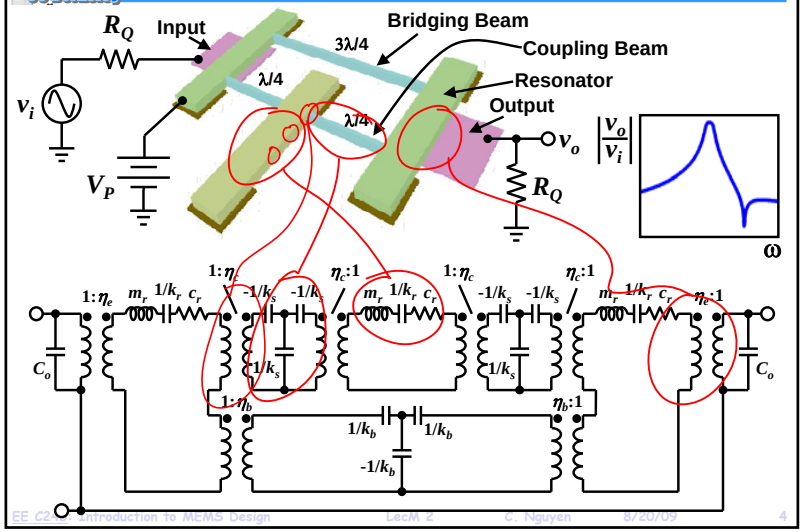

Copyright @ 2012 Regents of the University of California

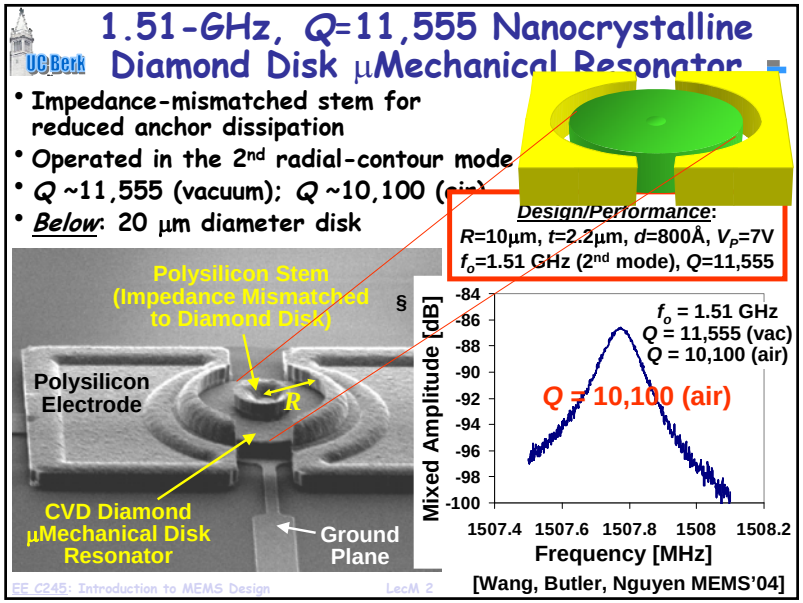

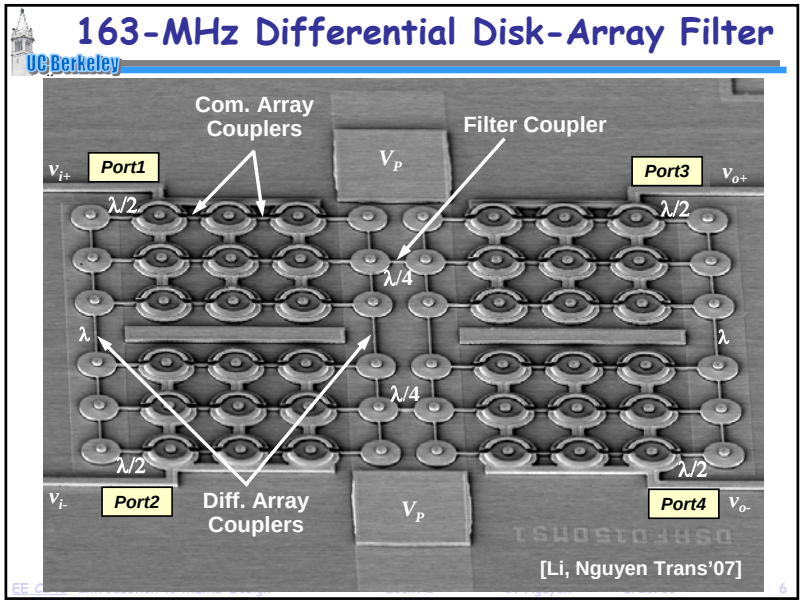

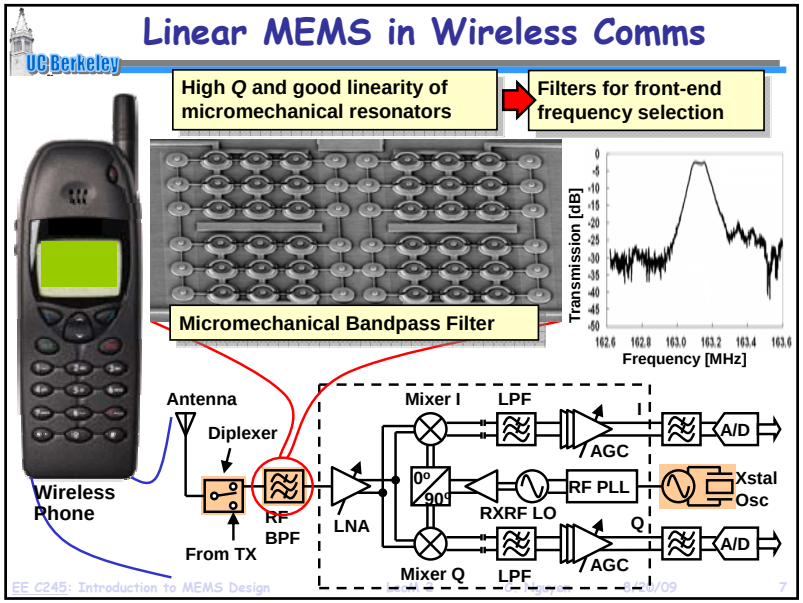

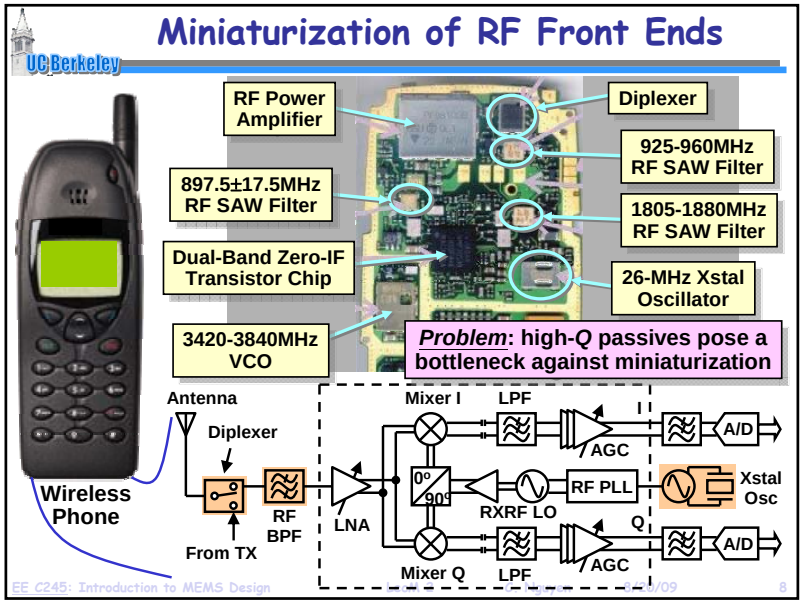

Copyright @ 2012 Regents of the University of California

Multi-Band Wireless Handsets

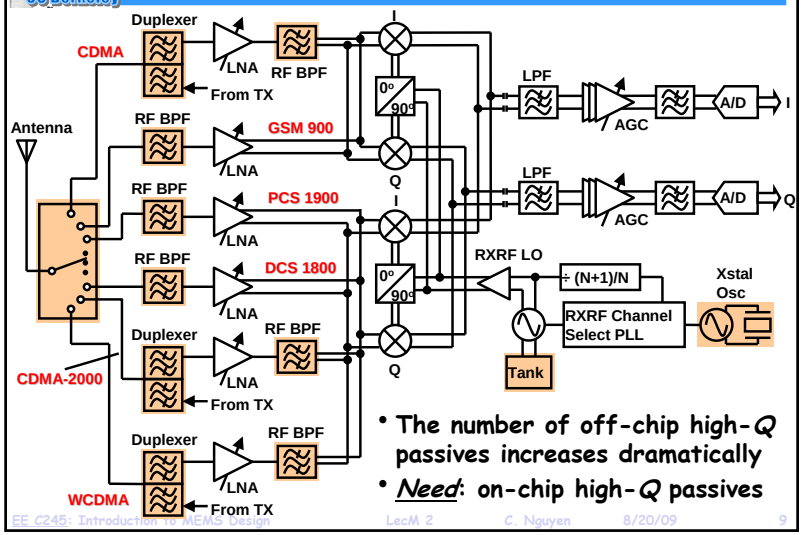

- The number of off-chip high-*Q* passives increases dramatically
- *Need*: on-chip high-*Q* passives

All High-*Q* Passives on a Single Chip

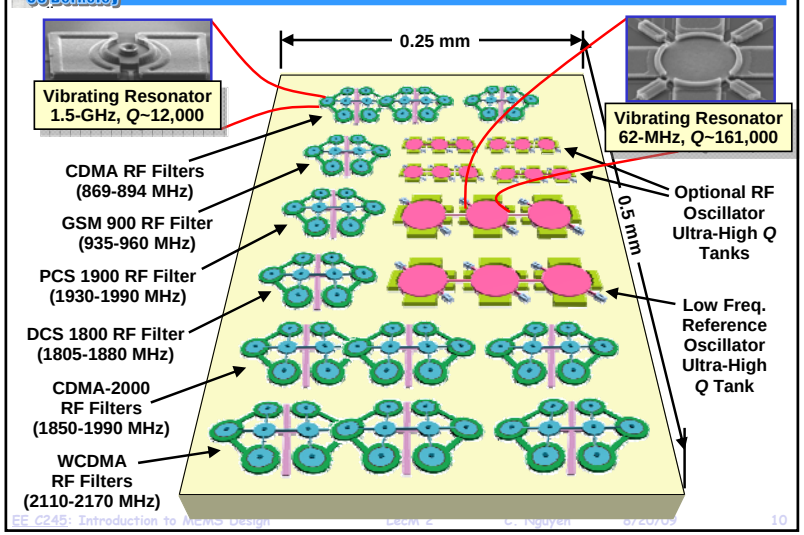

Chip-Scale Atomic Clocks (CSAC)

NIST F1 Fountain Atomic Clock

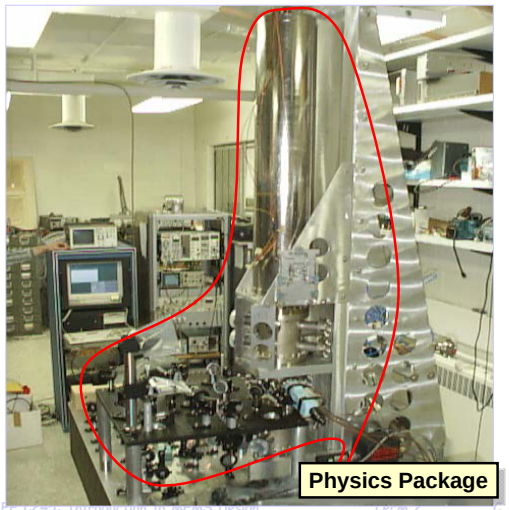

Vol: ~3.7 m³
Power: ~500 W
Acc: 1×10^{-15}
Stab: 3.3×10^{-15}/hr

After 1 sec ⇨
Error: 10^{-15} sec

Loses 1 sec every 30 million years!

Copyright @ 2012 Regents of the University of California

Benefits of Accurate Portable Timing

UC Berkeley

Better Timing

Networked Sensors

Secure Communications

More efficient spectrum utilization

Longer autonomy periods

Faster frequency hop rates

Faster acquire of pseudorandom signals

Superior resilience against jamming or interception

Larger networks with longer autonomy

GPS

Fewer satellites needed

Higher jamming margin

Faster GPS acquire

NIST F1 Fountain Atomic Clock

UC Berkeley

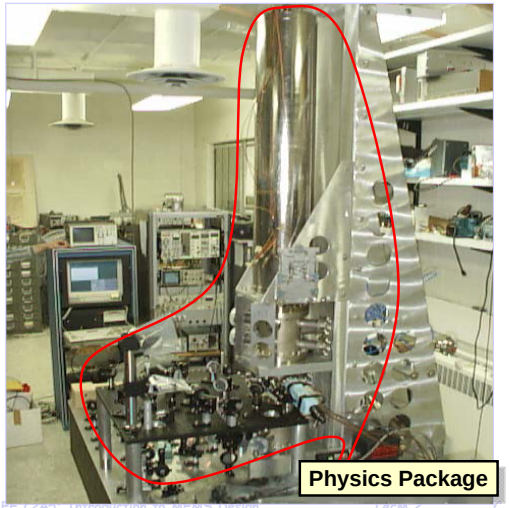

Vol: ~3.7 m³
Power: ~500 W
Acc: 1×10^{-15}
Stab: 3.3×10^{-15}/hr

After 1 sec ⇨
Error: 10^{-15} sec

Loses 1 sec every 30 million years!

1st Chip-Scale Atomic Physics Package

UC Berkeley

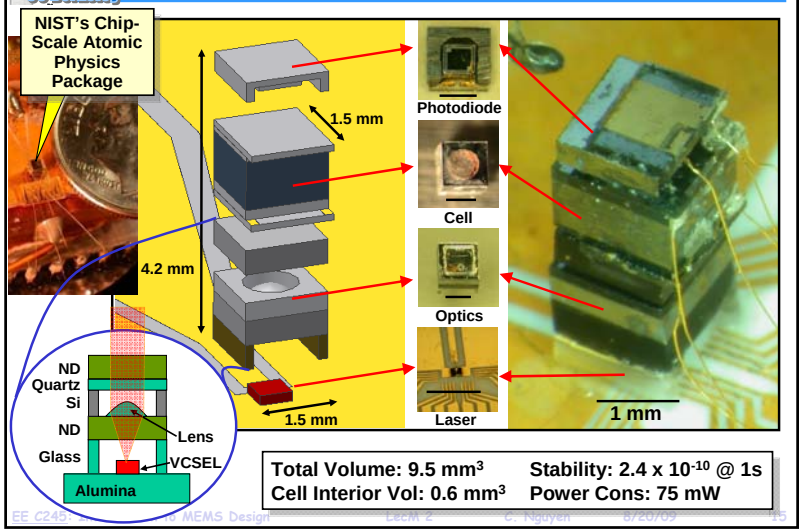

Total Volume: 9.5 mm³
Cell Interior Vol: 0.6 mm³
Stability: 2.4×10^{-10} @ 1s
Power Cons: 75 mW

Tiny Physics Package Performance

UC Berkeley

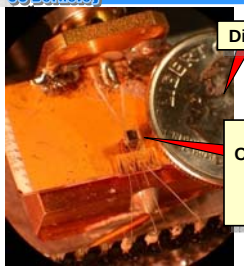

Open Loop Resonance:

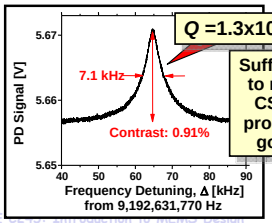

- *Experimental Conditions*:
  - Cs D2 Excitation
  - External (large) Magnetic Shielding
  - External Electronics & LO
  - Cell Temperature: ~80 °C
  - Cell Heater Power: 69 mW
  - Laser Current/Voltage: 2mA / 2V
  - RF Laser Mod Power: 70μW

Stability Measurement:

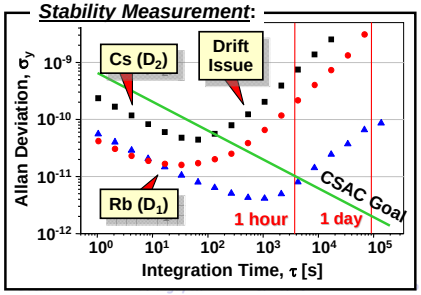

Copyright @ 2012 Regents of the University of California

Atomic Clock Fundamentals

- Frequency determined by an atomic transition energy

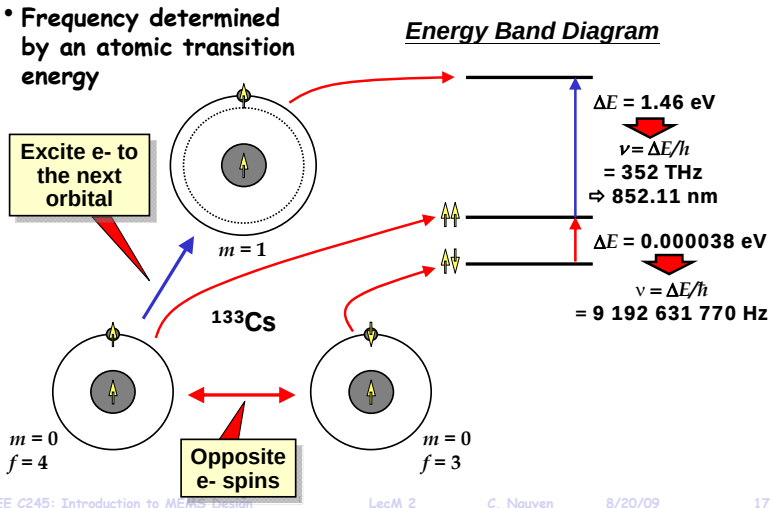

Miniature Atomic Clock Design

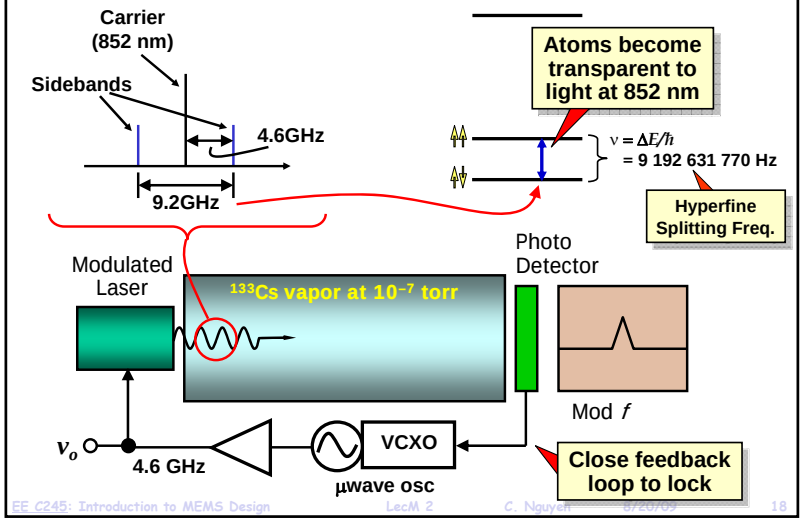

Chip-Scale Atomic Clock

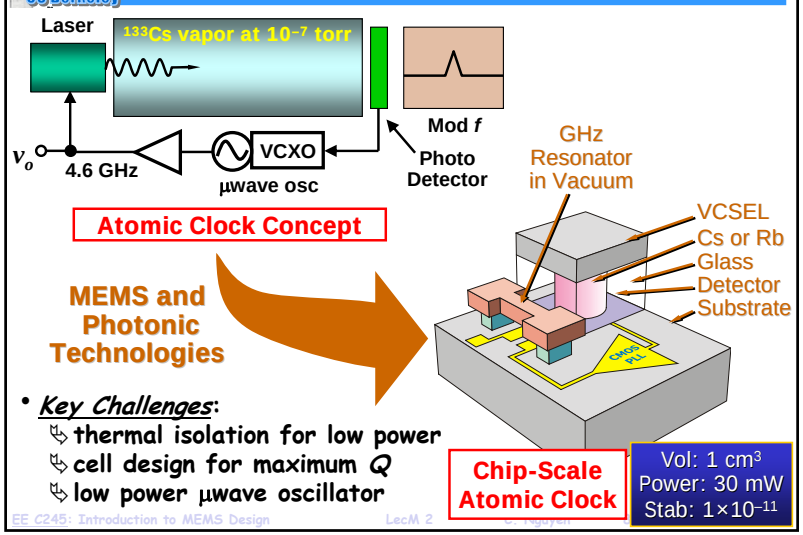

- *Key Challenges*:
  - thermal isolation for low power
  - cell design for maximum Q
  - low power µwave oscillator

Challenge: Miniature Atomic Cell

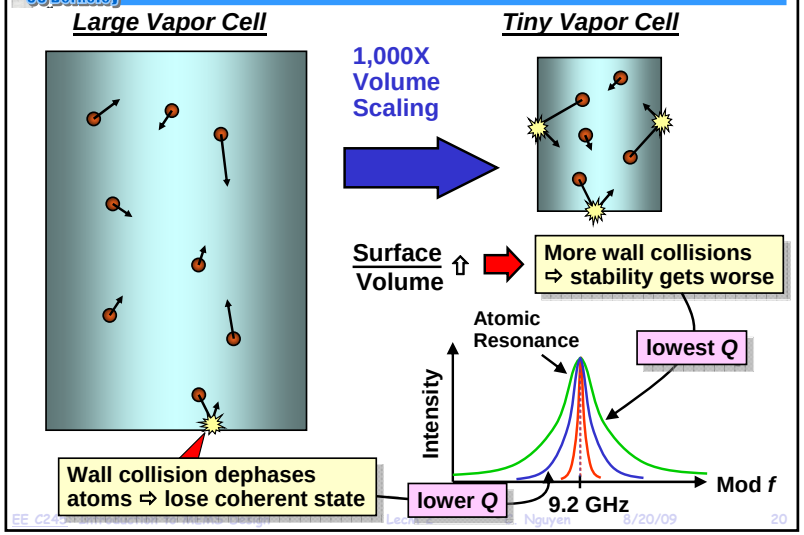

Copyright @ 2012 Regents of the University of California

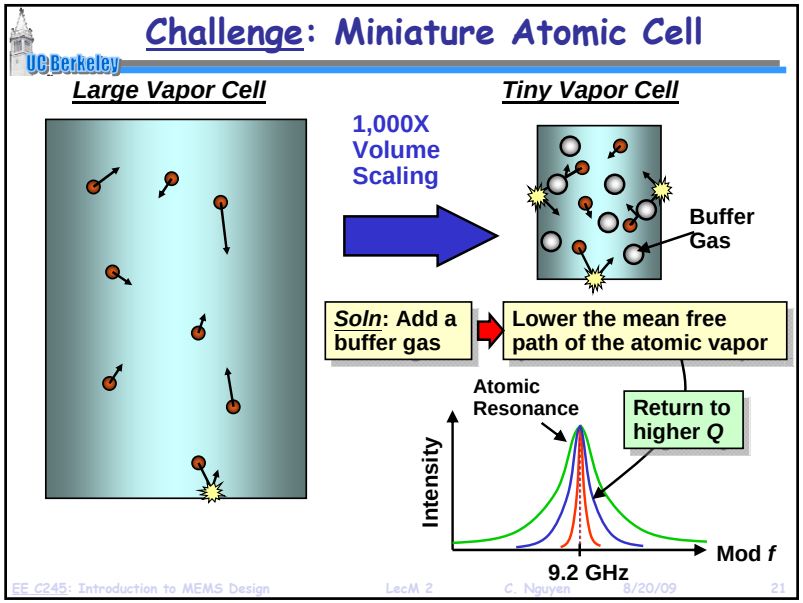

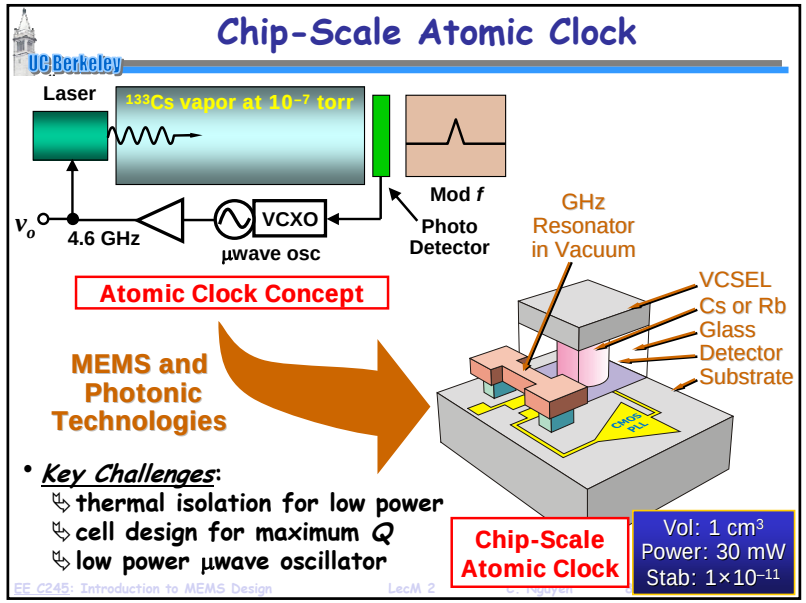

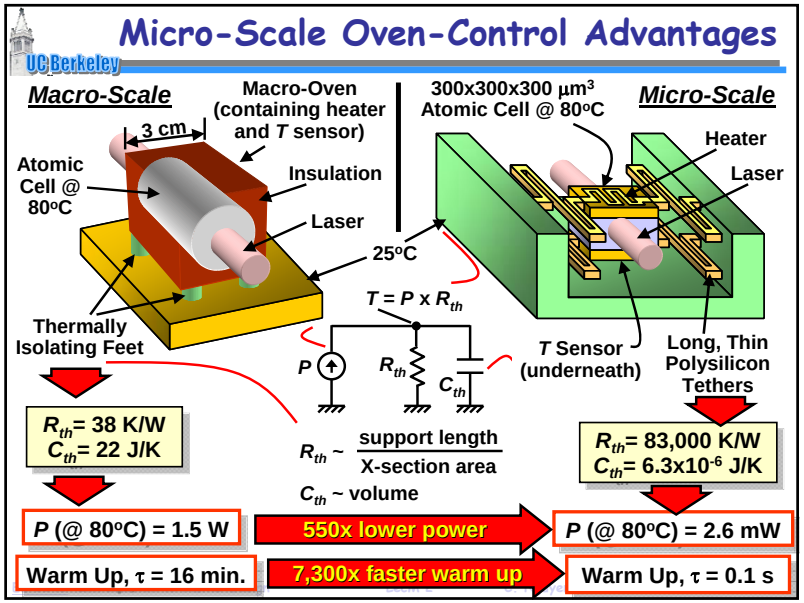

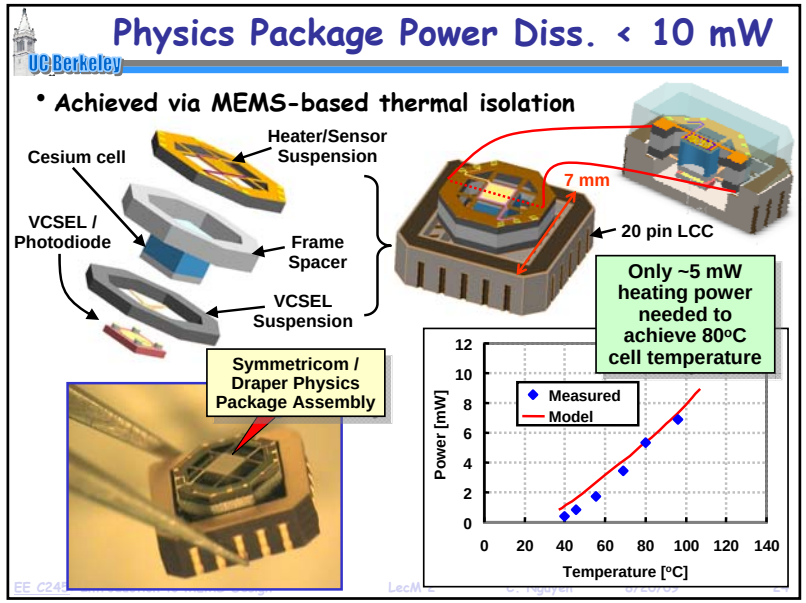

Copyright @ 2012 Regents of the University of California