EECS192 Lecture 3
Feb. 5, 2019

Notes:

- Handouts: lab rules
- 2/8 project proposal – upload to bcourses by Fri 5 pm
- 2/15: Motor drive/stall, steering servo
- Quiz 1: motor behavior Tues 2/12 (See Motor Worksheet week 2)
- CalDay Sat April 4/13

Topics

- Updated connector pin IO list
- Timing in Linux:
- Motor electrical model conclusion
  - Motor electromechanical behavior
- Driving MOSFETs and motor
  - Op amp ~~TLC084~~ NE5532
  - MC33883 MOSFET driver
  - H bridge
- PWM issues for motor
- (Back EMF measurement)

Beaglebone Blue Connections

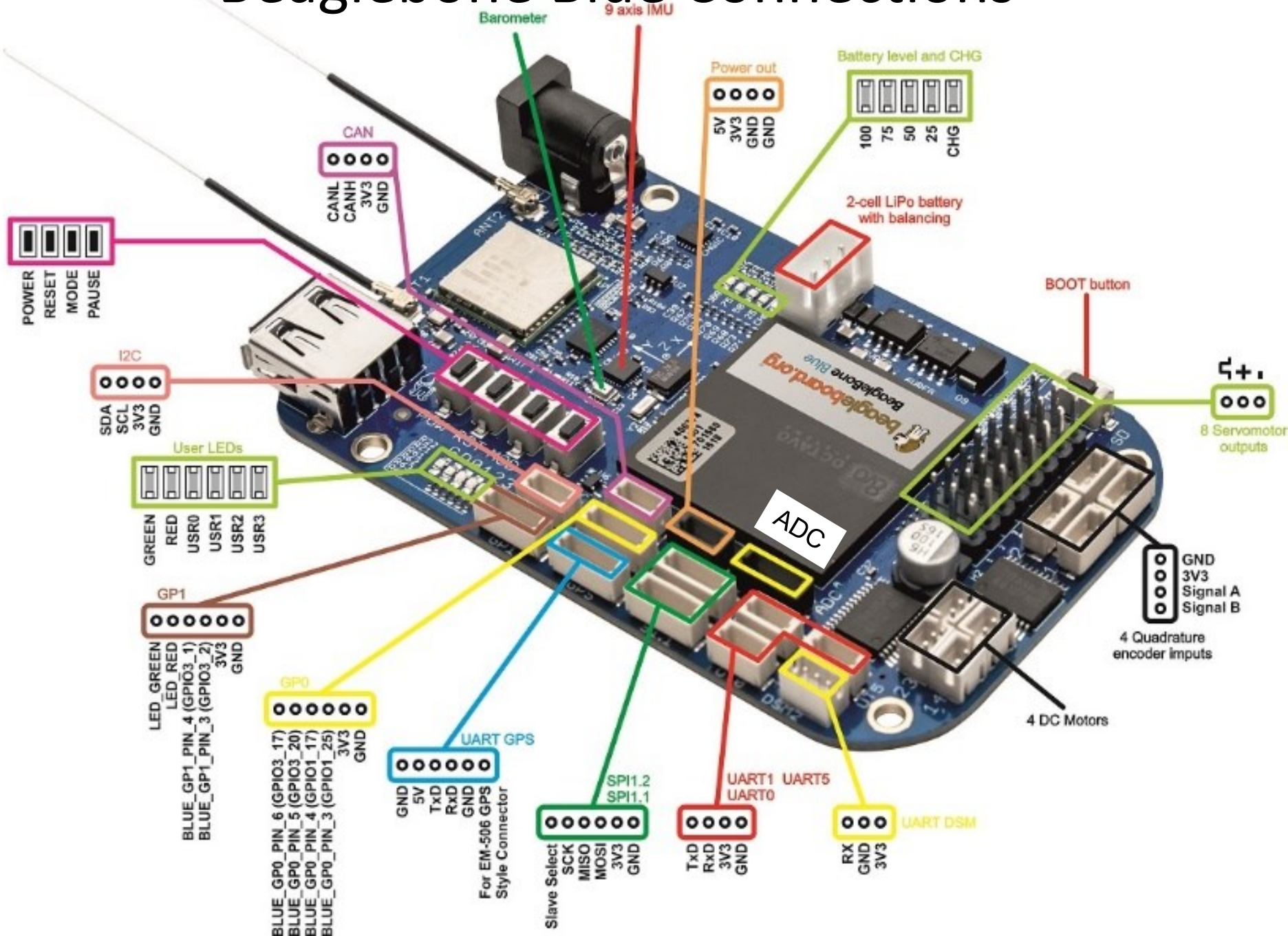

Beaglebone Blue Connections

http://inst.eecs.berkeley.edu/~ee192/sp19/files/BeagleBone_Blue_Pin_Table.xlsx

Use on Blue	**MODE0**	**MODE1**	**MODE2**	**MODE3**	**MODE4**	**MODE5**	**MODE6**	**MODE7**
SERVO 8X3 connections								
SERVO_1	lcd_vsync*	gpmc_a8			pr1_edio_data_out2	pr1_pru1_pru_r30_8	pr1_pru1_pru_r31_8	gpio2[22]
SERVO_2	lcd_pclk*	gpmc_a10			pr1_edio_data_out4	pr1_pru1_pru_r30_10	pr1_pru1_pru_r31_10	gpio2[24]
SERVO_3	lcd_hsync*	gpmc_a9			pr1_edio_data_out3	pr1_pru1_pru_r30_9	pr1_pru1_pru_r31_9	gpio2[23]
SERVO_4	lcd_ac_bias_en*	gpmc_a11			pr1_edio_data_out5	pr1_pru1_pru_r30_11	pr1_pru1_pru_r31_11	gpio2[25]
SERVO_5	lcd_data6*	gpmc_a6		eQEP2_index	pr1_edio_data_out6	pr1_pru1_pru_r30_6	pr1_pru1_pru_r31_6	gpio2[12]
SERVO_6	lcd_data7*	gpmc_a7		eQEP2_strobe	pr1_edio_data_out7	pr1_pru1_pru_r30_7	pr1_pru1_pru_r31_7	gpio2[13]
SERVO_7	lcd_data4*	gpmc_a4		eQEP2A_in	-	pr1_pru1_pru_r30_4	pr1_pru1_pru_r31_4	gpio2[10]
SERVO_8	lcd_data5*	gpmc_a5		eQEP2B_in	-	pr1_pru1_pru_r30_5	pr1_pru1_pru_r31_5	gpio2[11]
SERVO_PWR (80)	lcd_data10*	gpmc_a14	ehrpwm1A	mcasp0_axr0	-	pr1_mii0_rxd1	uart3_ctsn	gpio2[16]

Quad Encoder								
QEP_1A	Mcasp0_aclkr	eQEP0A_in	Mcaspo_axr2	Mcasp1_aclkx		pr1_pru0_pru_r30_4	pr1_pru0_pru_r31_4	gpio3[18]
QEP_1B	mcasp0_fsr	eQEP0B_in	mcasp0_aclk	mcasp1_fsx	EMU2_mux2	pr1_pru0_pru_r30_5	pr1_pru0_pru_r31_5	gpio3[19]
QEP_2A	lcd_data12*	gpmc_a16	eQEP1A_in	mcasp0_aclkr	mcasp0_axr2	pr1_mii0_rxlink	uart4_ctsn	gpio0[8]
QEP_2B	lcd_data13*	gpmc_a17	eQEP1B_in	mcasp0_fsr	mcasp0_axr3	pr1_mii0_rxer	uart4_rtsn	gpio0[9]
QEP_3A	gpmc_ad12	lcd_data19	mmc1_dat4*	mmc2_dat0	EQEP2A_IN	pr1_mii0_txd2	pr1_pru0_pru_r30_14	gpio1[12]
QEP_3B	gpmc_ad13	lcd_data18	mmc1_dat5*	mmc2_dat1	eQEP2B_in	pr1_mii0_txd1	pr1_pru0_pru_r30_15	gpio1[13]
QEP_4B	gpmc_ad15	lcd_data16	mmc1_dat7*	mmc2_dat3	eQEP2_strobe	pr1_ecap0_ecap_capin_apwm_o	pr1_pru0_pru_r31_15	gpio1[15]
QEP_4A	gpmc_ad14	lcd_data17	mmc1_dat6*	mmc2_dat2	eQEP2_index	pr1_mii0_txd0	pr1_pru0_pru_r31_14	gpio1[14]

Delay timing using rc library

```
start_time = rc_nanos_thread_time();
   for(j = 0; j< 1000; j++)
   {shared_mem_32bit_ptr[ENCODER_MEM_OFFSET+1] = 1;
// set flag to start conversion by PRU
   while(shared_mem_32bit_ptr[ENCODER_MEM_OFFSET+1] == 1);
// wait for PRU to zero word
      for(i = 0; i< 128; i++){
linescan[i]=
    (int) shared_mem_32bit_ptr[ENCODER_MEM_OFFSET+2+i];
// copy data
            }
      }
end_time = rc_nanos_thread_time();
run_time = end_time - start_time;
```

A to D using PRU

pru_firmware/src/main_pru0.c

```
#define PRU_SHAREDMEM 0x10000 //shared memory with Cortex A8
#define GPIO1 0x4804C000
#define GPIO_CLEARDATAOUT 0x190
#define GPIO_SETDATAOUT 0x194

// try to access shared memory from C
      shared_mem_32bit_ptr = (volatile unsigned int *)
PRU_SHAREDMEM;
      init_adc();
// signal to Linux process that PRU is running/ready by
clear []
      shared_mem_32bit_ptr[ENCODER_MEM_OFFSET] = 0x0;...
      for(i = 0; i< 128; i++)
      {      __R30 &= ~CLK; // reset CLK line
             shared_mem_32bit_ptr[ENCODER_MEM_OFFSET+2+i] =
                   read_adc(0);
             __R30 |= CLK; // set CLK
             __delay_cycles(10); // allow hold time = 50 ns
      }
```

DC Motor Physical Model-review

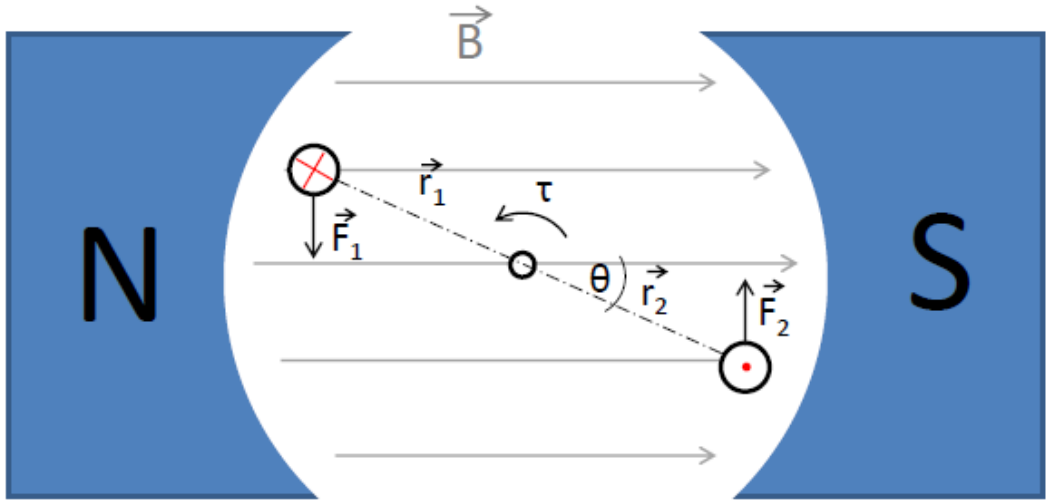

$$\vec{F} = i\vec{l} \times \vec{B}$$

$$\tau = \vec{r}_1 \times \vec{F}_1 + \vec{r}_2 \times \vec{F}_2$$

Motor Electrical Model

Motor Electrical Model
Back EMF
Motor electromechanical behavior

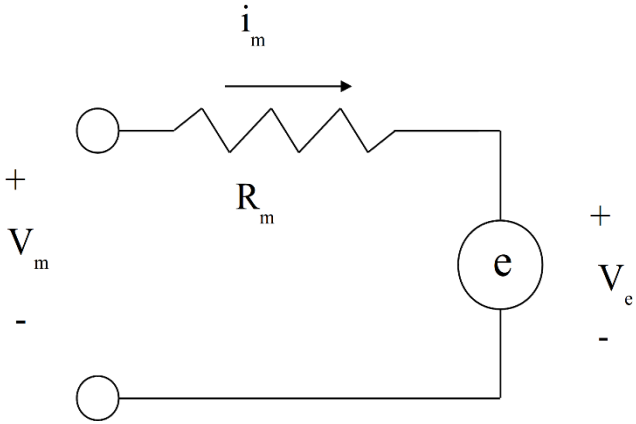

Continued on board
Also- see motor worksheet……

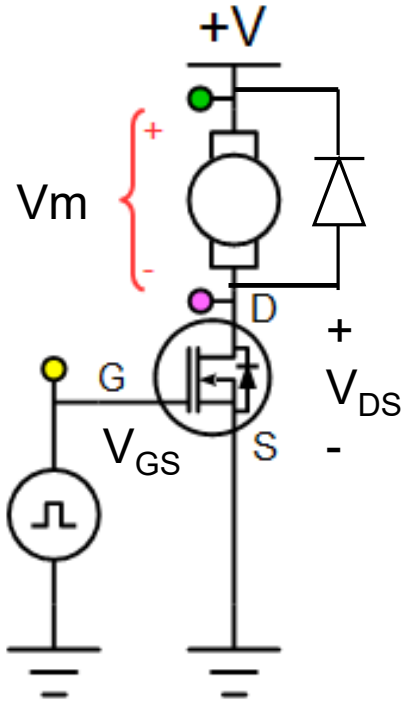

Note: missing e-stop!

Motor model

For this problem, consider a DC permanent magnet motor (as used in your car). The car is on a carpet and moves in a straight line with no slip between the wheels and the carpet. The car is initially moving at a speed of 2 meters per second.

You can assume a motor model as shown below. The qualitative shape of the curves is more important than magnitudes.

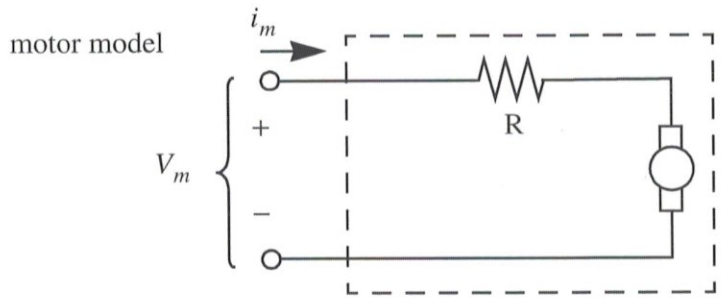

[4 pts.] **a)** Consider the motor driven from a voltage source with voltage $v(t)$, as shown. Sketch car velocity $\dot{x}(t)$ and motor terminal current for the time indicated.

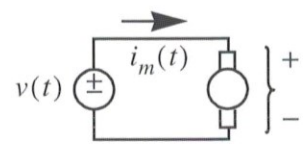

Let peak speed = 5 m/sec
Accel = 5 m/s^2
k_e = 1 v/(m/sec)
On board

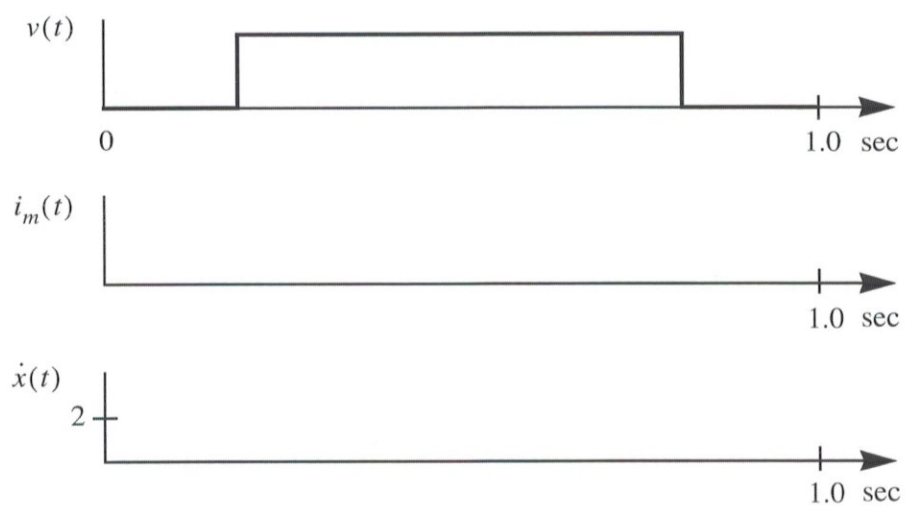

(for answer
see sp99 final solution)

MOSFETs and motor drive

Given: Rm = 0.1 ohms, Vbatt = 7.2 V, Rbat = 0.

Vds = ? ➔ Ids = ? amps

(LiPo 11 V!)

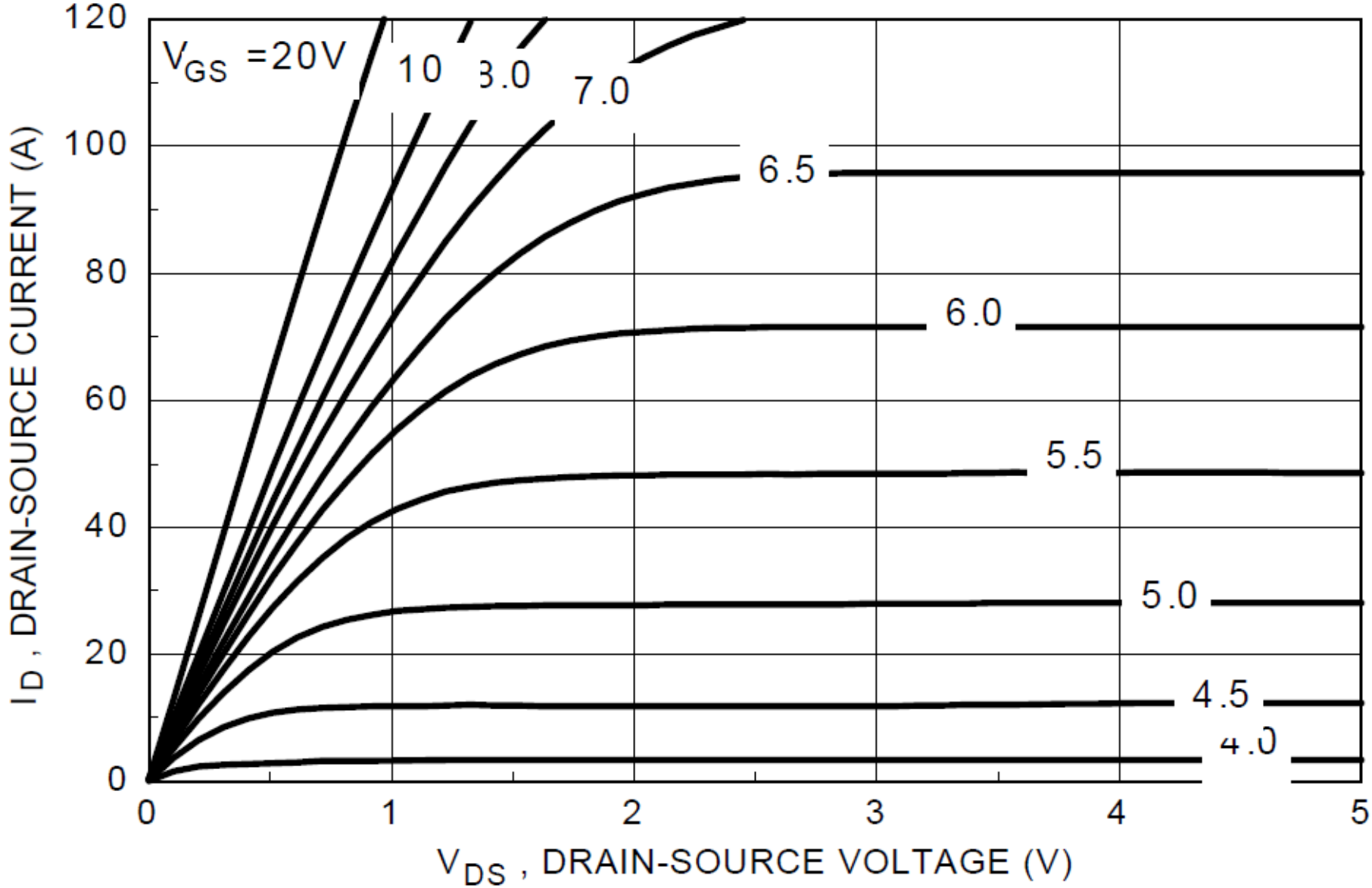

Driving MOSFETs and motor

Rm = 0.1 ohms, Vbatt = 7.2 V, Rbat = 0.

Vds = 3.6V ➔ Ids = (7.2-3.6V)/(0.1 ohm) = 36 amps

Key design points:

1) High Vgs better than low Vgs
2) Switch quickly
3) Make sure Vs=0 (big ground)

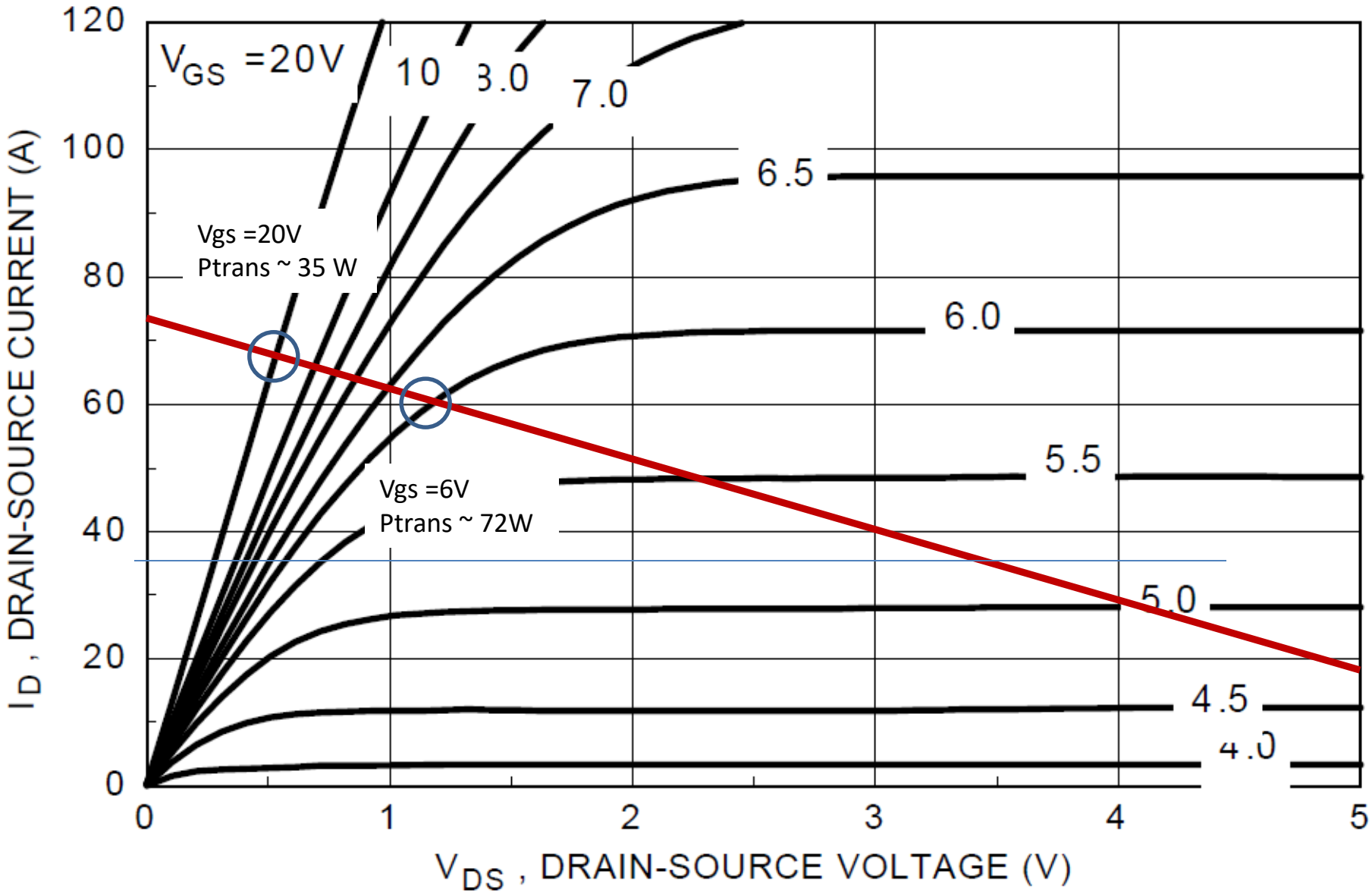

Motor Drive Quick and Dirty w/ Op Amp

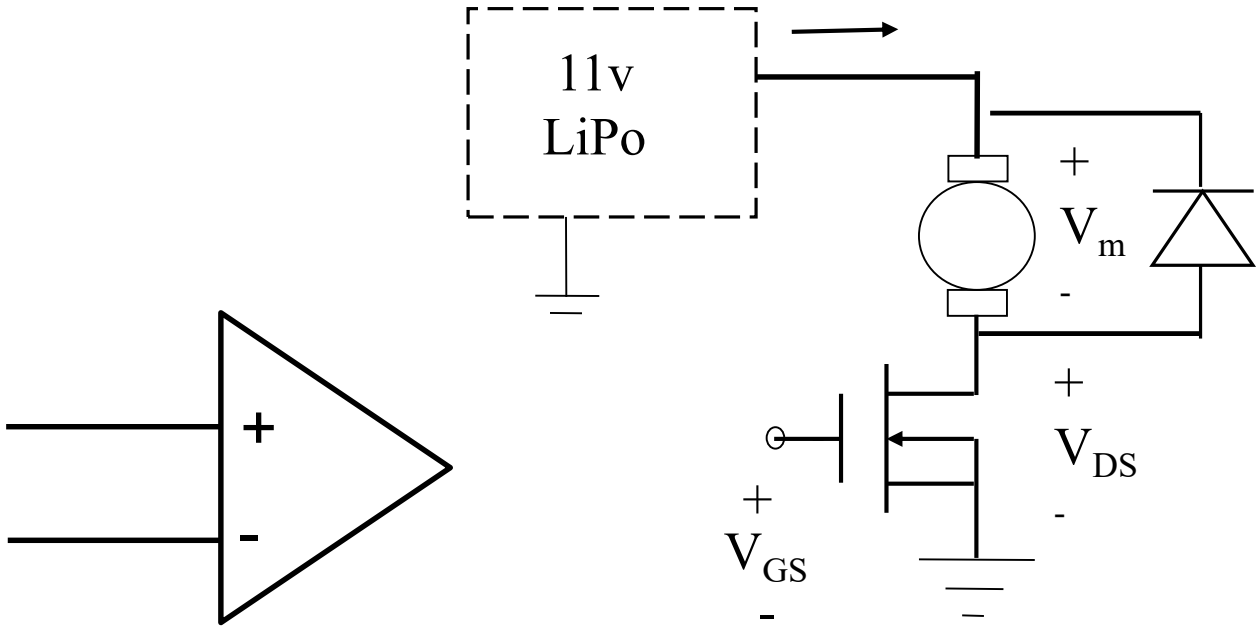

Details On board….

~~TLC084~~ (short circuit protection lacking)
~~or TLC074~~
NE5532 or LMC6482 op amp

Checklist:
1) Emergency stop
2) Reset Protection
3) Snubbing
4) High current diode
   (or MOSFET body diode)

100 ohm series resistance for current limiting

Driving MOSFETs and motor

How to choose PWM frequency?

IRFB 3006 Power MOSFET

Symbol	Parameter	Min.	Typ.	Max.	Units	Conditions
gfs	Forward Transconductance	280	—	—	S	V_{DS} = 25V, I_D = 170A
Q_g	Total Gate Charge	—	200	300	nC	I_D = 170A
Q_{gs}	Gate-to-Source Charge	—	37	—		V_{DS} =30V
Q_{gd}	Gate-to-Drain ("Miller") Charge	—	60			V_{GS} = 10V ⑤
Q_{sync}	Total Gate Charge Sync. (Q_g - Q_{gd})	—	140	—		I_D = 170A, V_{DS} =0V, V_{GS} = 10V
$t_{d(on)}$	Turn-On Delay Time	—	16	—	ns	V_{DD} = 39V
t_r	Rise Time	—	182	—		I_D = 170A
$t_{d(off)}$	Turn-Off Delay Time	—	118	—		R_G = 2.7Ω
t_f	Fall Time	—	189	—		V_{GS} = 10V ⑤
C_{iss}	Input Capacitance	—	8970	—	pF	V_{GS} = 0V

TLC084 Op amp (same pinout as TL074)

V_{OH}	High-level output voltage	V_{IC} = 2.5 V	I_{OH} = –1 mA	25°C	4.1	4.3		V
				Full range	3.9			
			I_{OH} = –20 mA	25°C	3.7	4		
				Full range	3.5			
			I_{OH} = –35 mA	25°C	3.4	3.8		
				Full range	3.2			
			I_{OH} = –50 mA	25°C	3.2	3.6		
				–40°C to 85°C	3			
V_{OL}	Low-level output voltage	V_{IC} = 2.5 V	I_{OL} = 1 mA	25°C		0.18	0.25	V
				Full range			0.35	
			I_{OL} = 20 mA	25°C		0.35	0.39	
				Full range			0.45	
			I_{OL} = 35 mA	25°C		0.43	0.55	
				Full range			0.7	
			I_{OL} = 50 mA	25°C		0.45	0.63	
				–40°C to 85°C			0.7	
I_{OS}	Short-circuit output current	Sourcing		25°C		100		mA
		Sinking		25°C		100		
I_O	Output current	V_{OH} = 1.5 V from positive rail		25°C		57		mA
		V_{OL} = 0.5 V from negative rail		25°C		55		

How to choose PWM frequency (if using op amp)?

(on board)

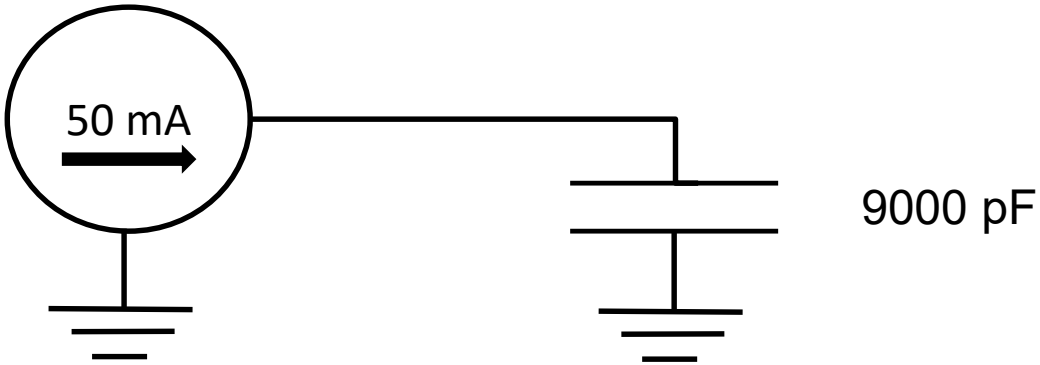

Motor Drive Quick and Dirty w/ Op Amp

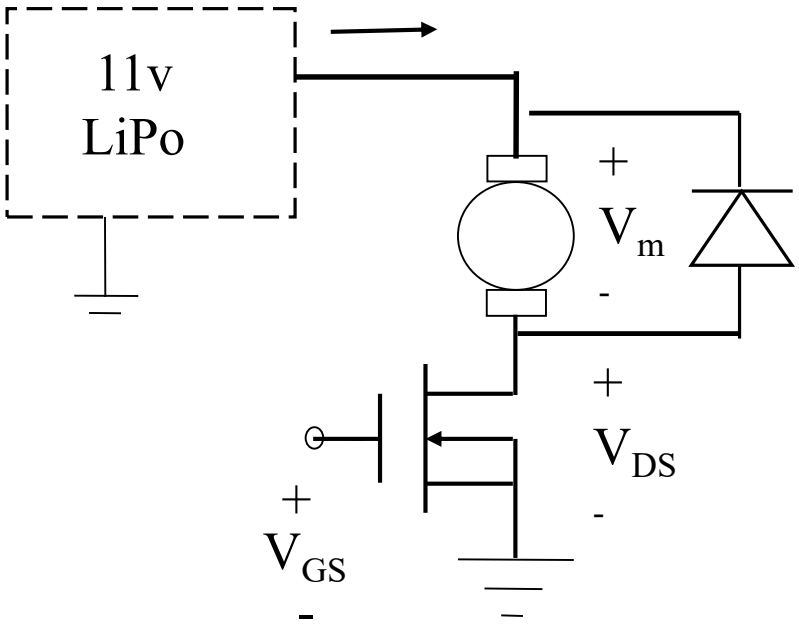

- IRFB3006: C_{GS}= 9000 pF
- TL084: 50 mA
- i = C dV/dt
- dV/dt = i/C ~ 5 V/usec ➔ 2us on + 2 us off, PWM < 100 us period
- TL084 slew rate: 10 V/usec ➔ exceed current limit
- Series resistor on output of op amp of 200 ohms, limits current to 50 mA (10V/200 ohms = 50 mA)

PWM for Main Motor control

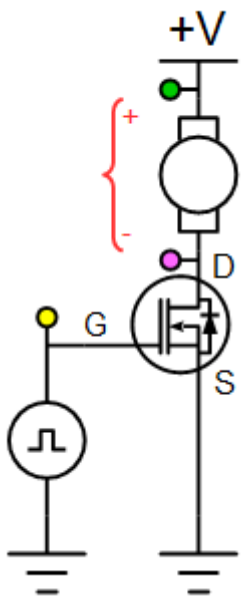

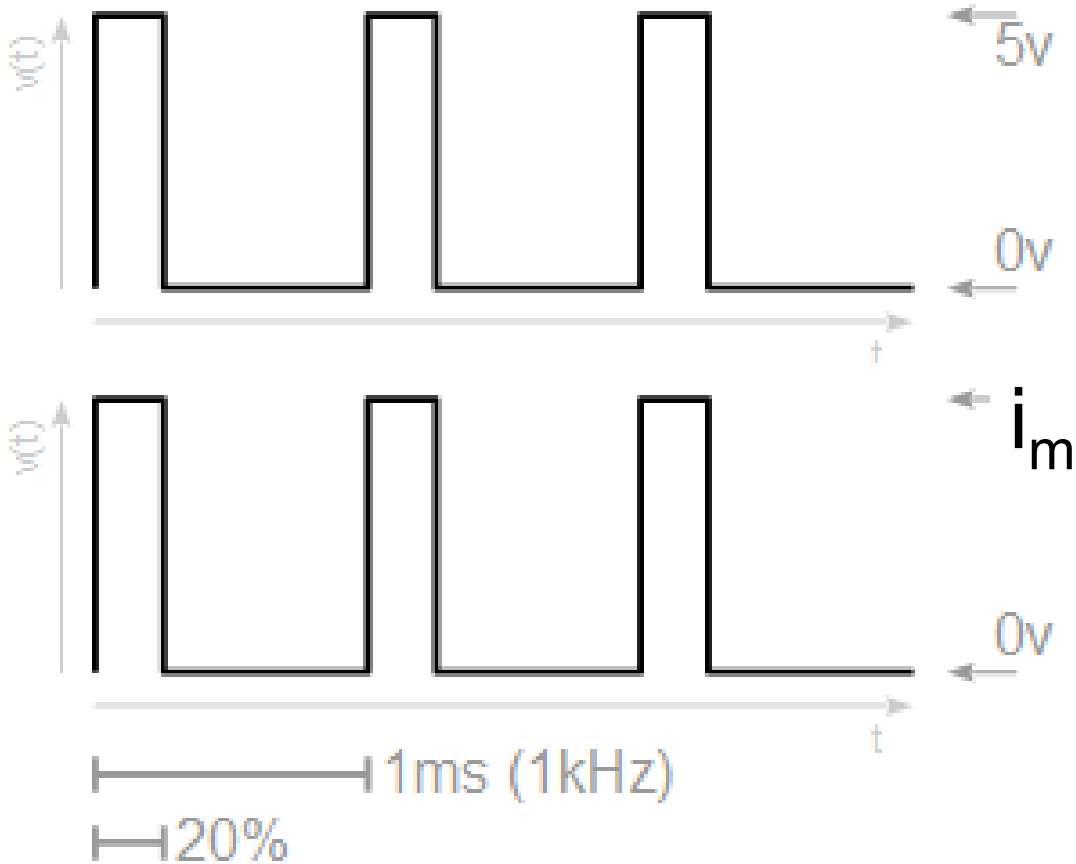

$$\langle i_m \rangle = (T/T_o)\, i_{max}$$

Is i_{max} constant?

Driving MOSFETs and motor

H-Bridge Gate Driver IC

The 33883 is an H-bridge gate driver (also known as a full-bridge pre-driver) IC with integrated charge pump and independent high and low side gate driver channels. The gate driver channels are independently controlled by four separate input pins, thus allowing the device to be optionally configured as two independent high side gate drivers and two independent low side gate drivers. The low side channels are referenced to ground. The high side channels are floating.

The gate driver outputs can source and sink up to 1.0 A peak current pulses, permitting large gate-charge MOSFETs to be driven and/or high pulse- width modulation (PWM) frequencies to be utilized. A linear regulator is incorporated, providing a 15 V typical gate supply to the low side gate drivers.

This device powered by SMARTMOS technology.

Features

- V_{CC} operating voltage range from 5.5 V up to 55 V
- V_{CC2} operating voltage range from 5.5 V up to 28 V
- CMOS/LSTTL compatible I/O
- 1.0 A peak gate driver current
- Built-in high side charge pump
- Under-voltage lockout (UVLO)
- Over-voltage lockout (OVLO)
- Global enable with <10 μA Sleep mode
- Supports PWM up to 100 kHz

33883

H-BRIDGE GATE DRIVER IC

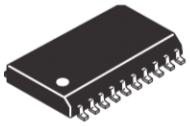

EG SUFFIX (PB-FREE)
98ASB42343B
20-PIN SOICW

ORDERING INFORMATION		
Device (Add R2 Suffix for Tape and Reel)	**Temperature Range (T_A)**	**Package**
MC33883HEG	-40 °C to 125 °C	20 SOICW

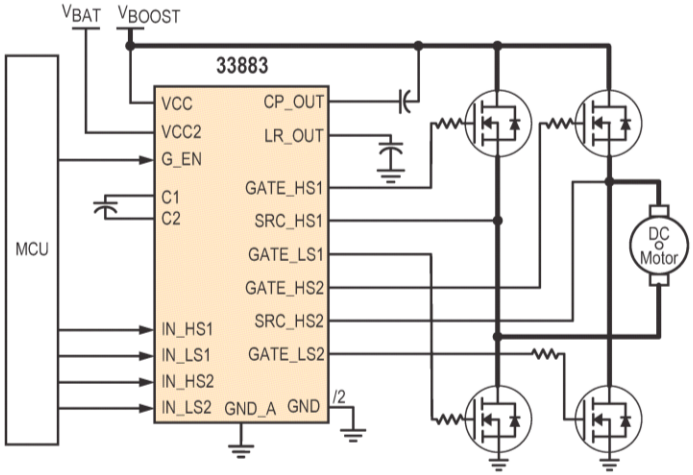

Figure 1. 33883 Simplified Application Diagram

MC3383 + H bridge

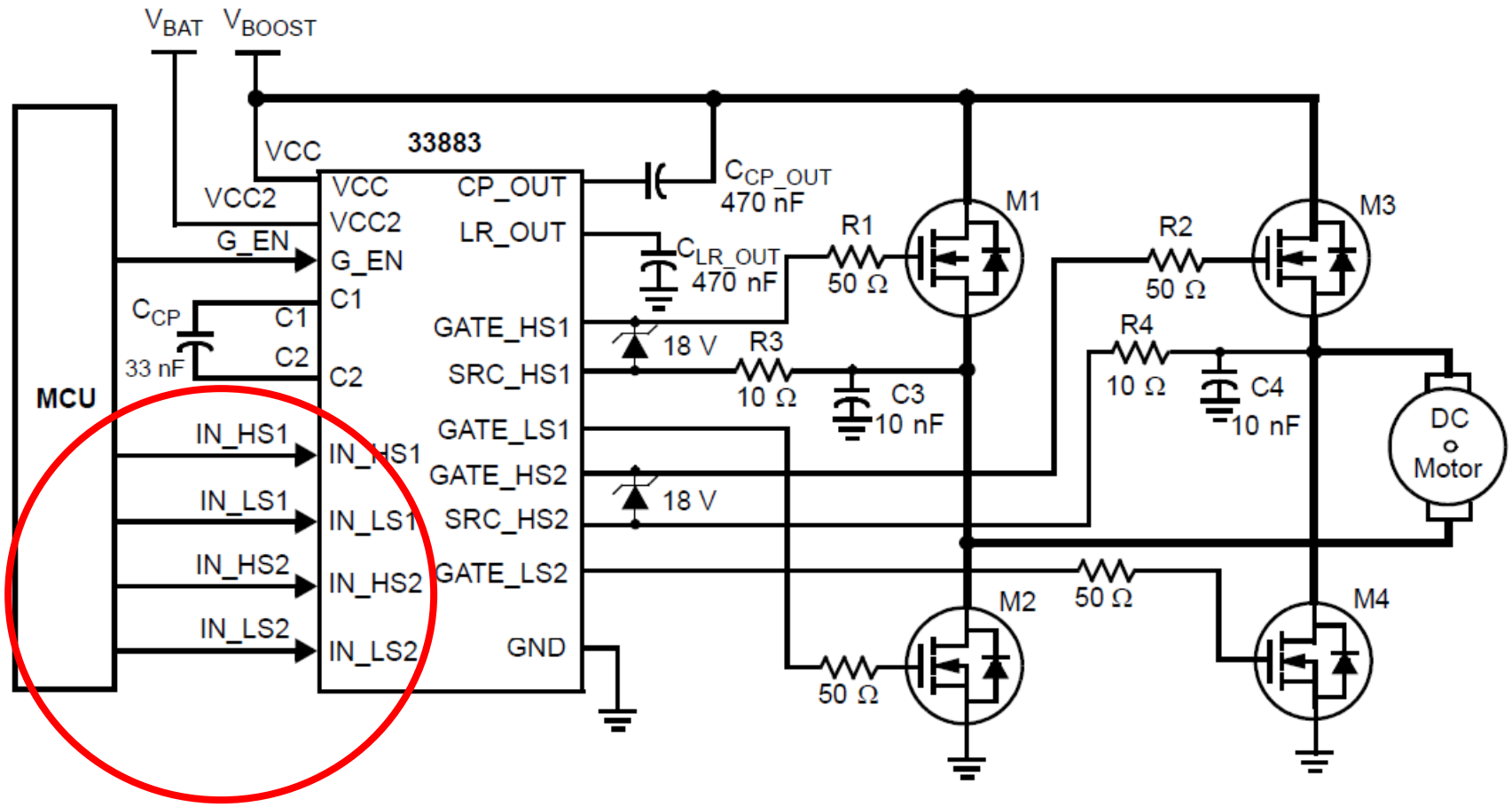

Figure 14. Application Schematic with External Protection Circuit

!!!!CAUTION!!!!
Software fries hardware….
Need protection logic- 74HCxxx
Estop?

MC3383 protection

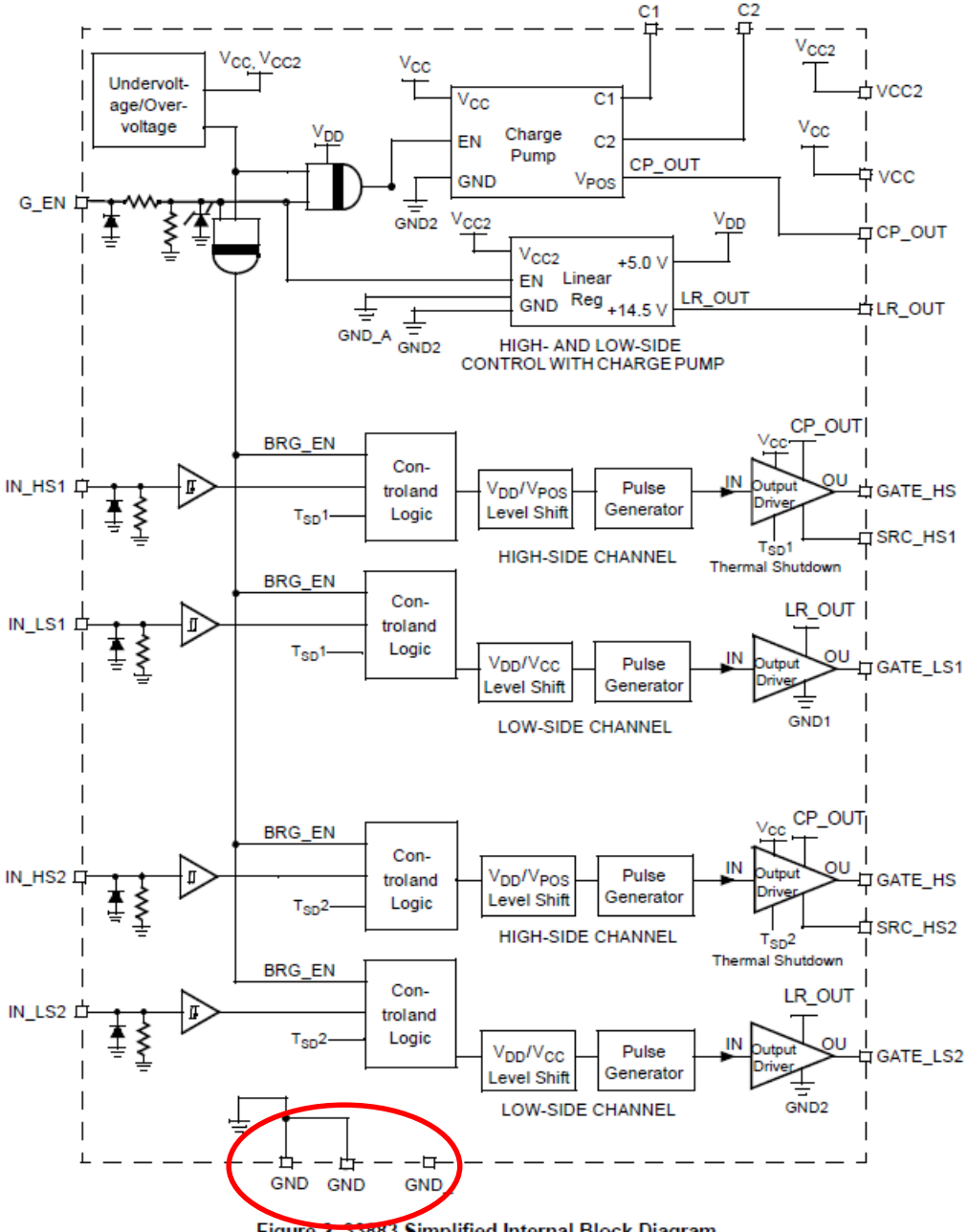

Figure 2. 33883 Simplified Internal Block Diagram

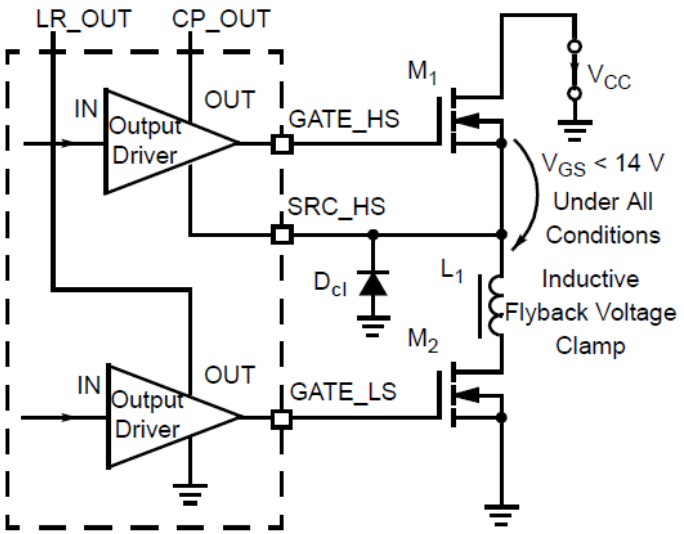

Figure 12. Gate Protection and Flyback Voltage Clamp

Caution: don't run motor current through here

Wiring Notes: caution on Vgs

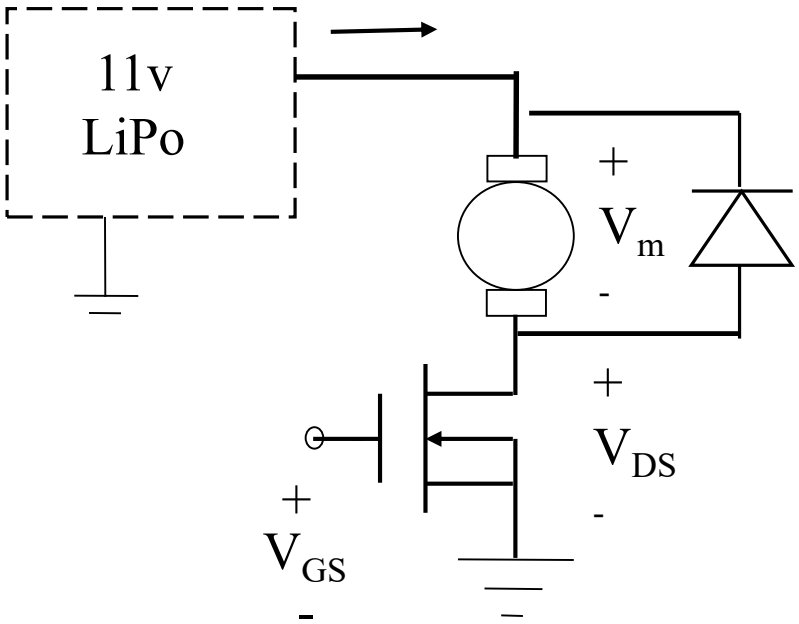

On board

Watch out for voltage drop in wires/PCB traces.
#22 wire: 50 mOhm/m
#12 wire: 5 mOhm/m

Extra Slides

PWM Skeleton/Example

https://github.com/ucb-ee192/SkeletonMCUX/tree/master/frdmk64f_pwm

```
FTM_UpdatePwmDutycycle
(BOARD_FTM_BASEADDR, BOARD_FTM_CHANNEL,
        kFTM_CenterAlignedPwm, updated_duty_cycle);
```

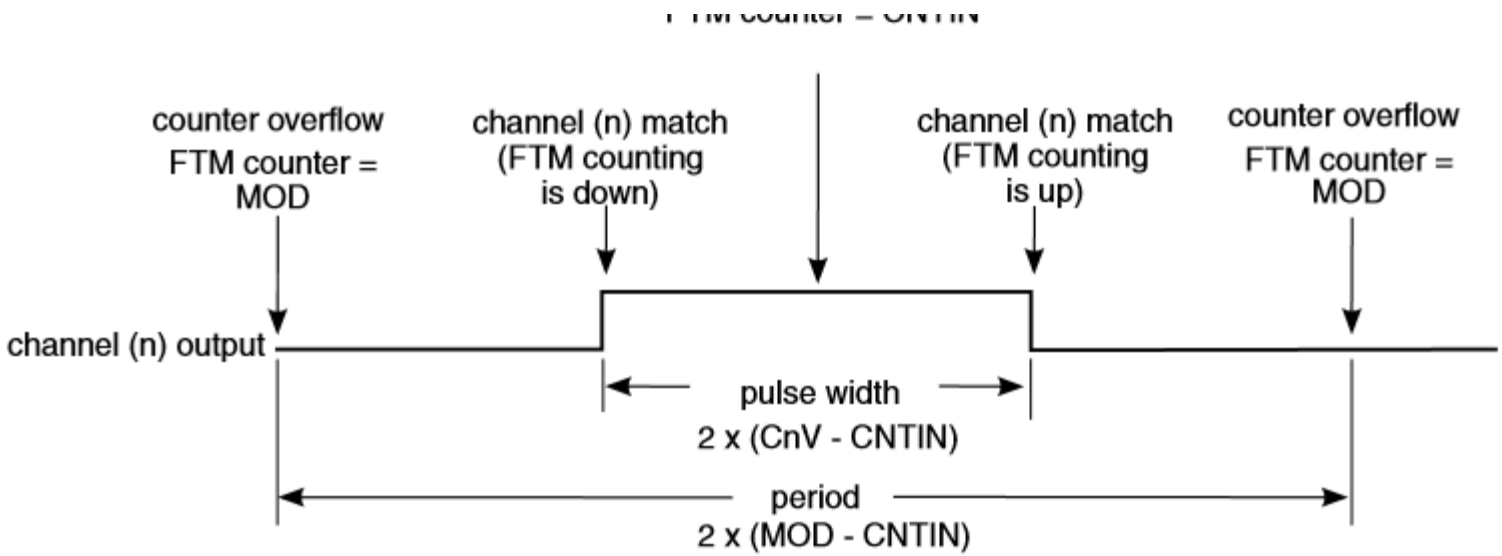

Figure 40-21. CPWM period and pulse width with ELSnB:ELSnA = 1:0