Lecture 7 - MOSFETs 1Tx amps

EE140 Spring 2014
Vladimir Stojanović

No lecture / office hours on Wednesday.

Office hours Thu 3-4pm 513 Cory

Common-Source

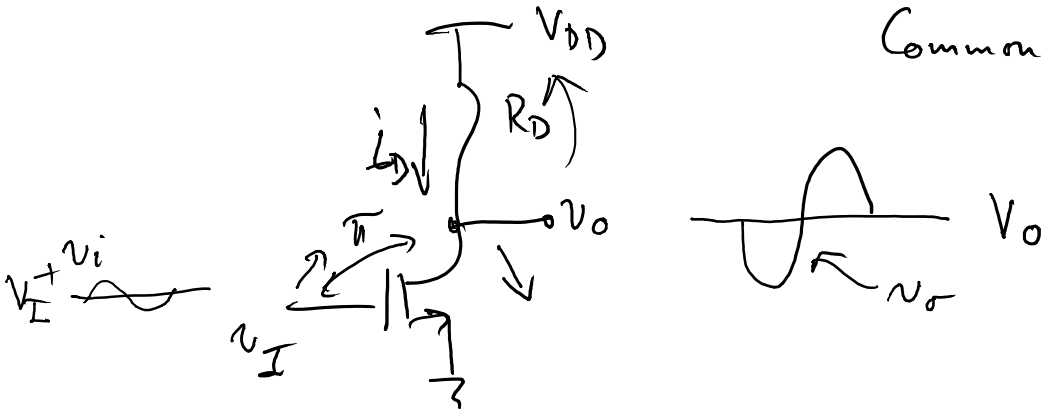

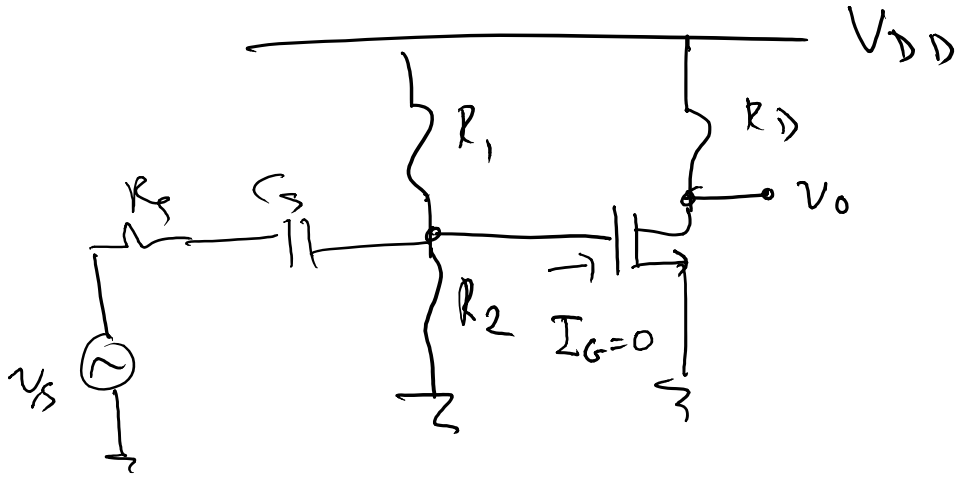

$$v_{GS} = \frac{R_2}{R_1 + R_2} \cdot V_{DD}$$

3 regions of operation:

* Cutoff : $v_I < V_{th}$
* Linear : $v_I > V_{th}$, $v_o < v_I - V_{th}$
* Saturation : $v_I > V_{th}$, $v_o > v_I - V_{th}$

Lecture 7 - MOSFETs 1Tx amps

EE140 Spring 2014
Vladimir Stojanović

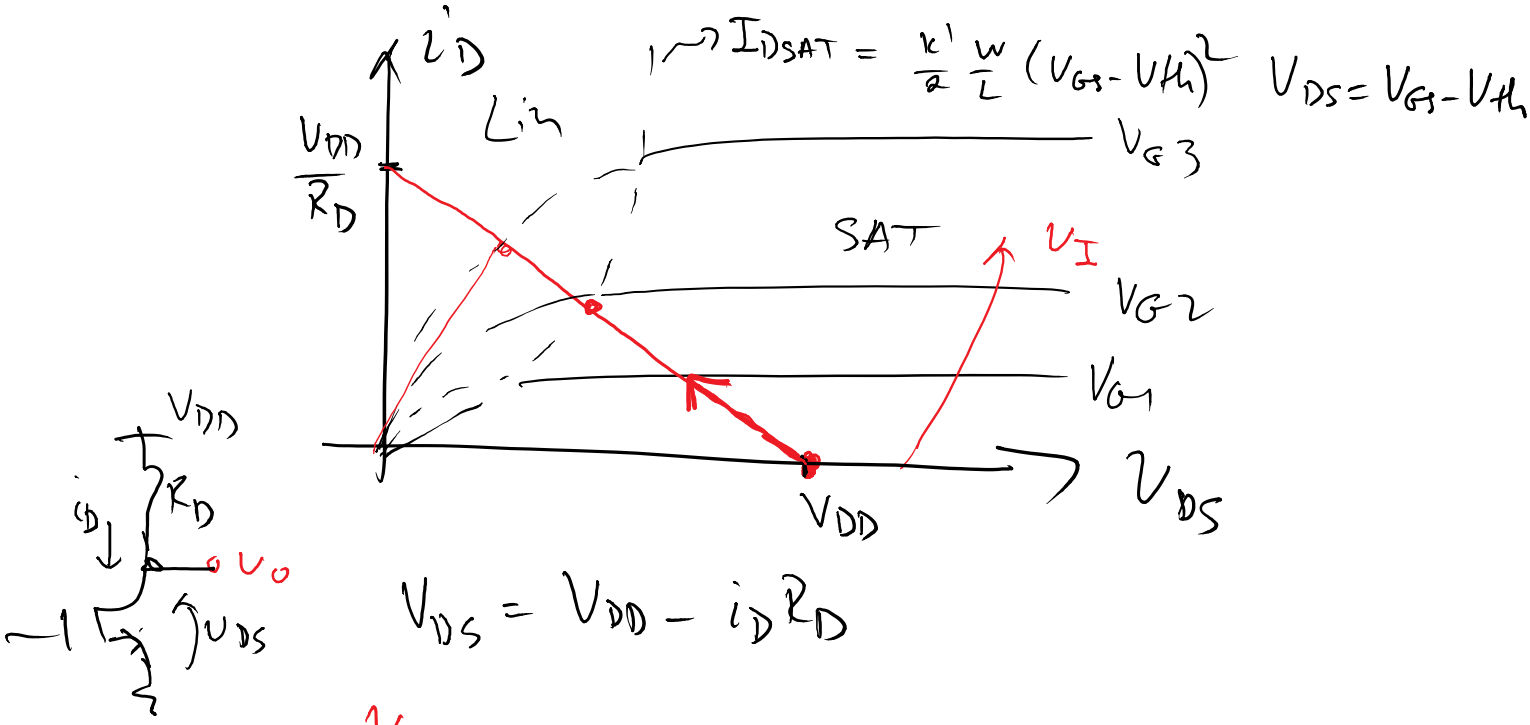

$$V_{DS} = V_{DD} - i_D R_D$$

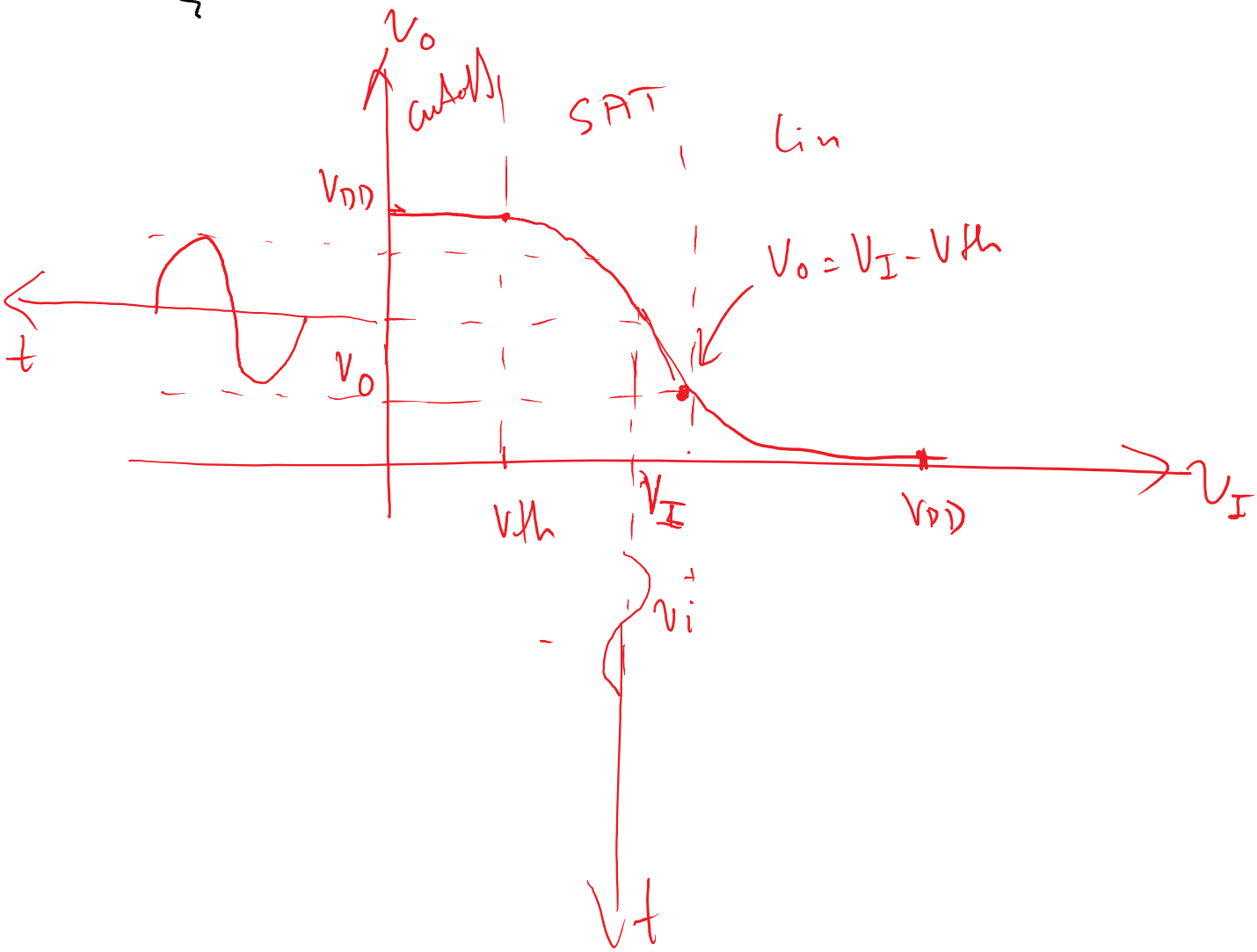

Small-signal analysis

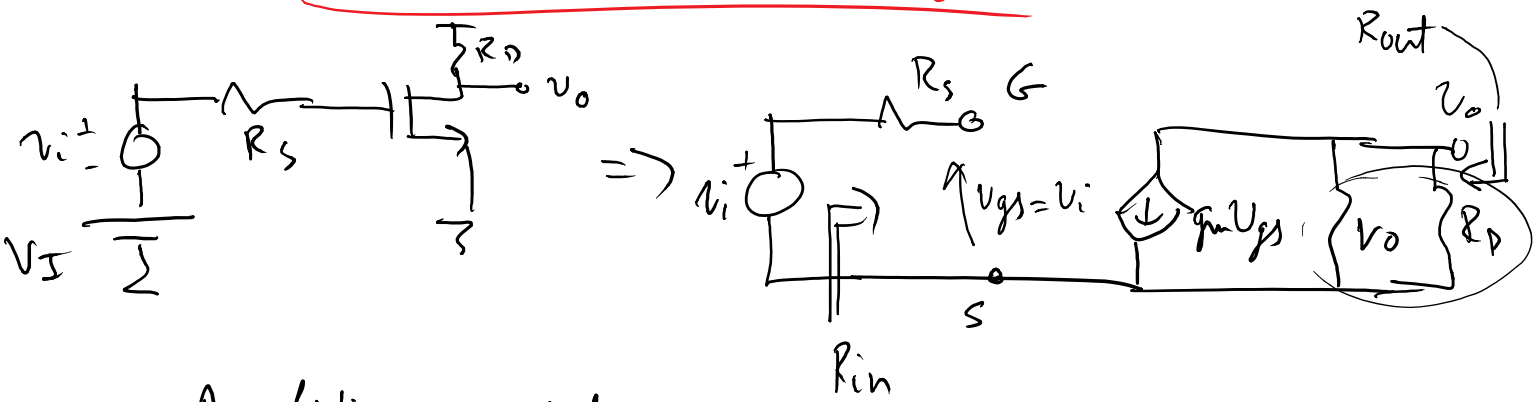

Amplifier models:

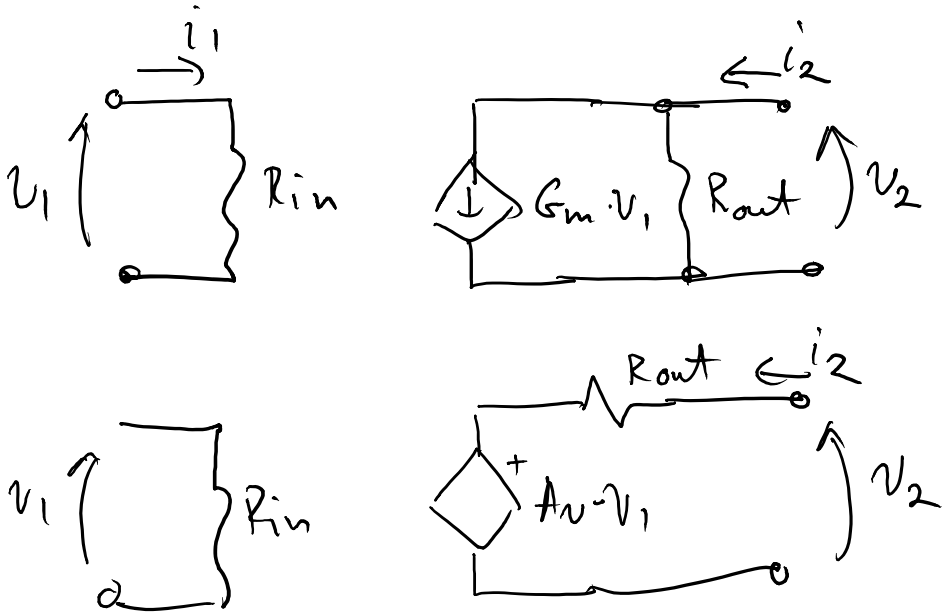

Find:

R_{in}, R_{out}

$$G_m = \left.\frac{i_2}{v_1}\right|_{v_2=0}$$

$$A_v = \left.\frac{v_2}{v_1}\right|_{i_2=0}$$

$A_v = -G_m R_{out}$

$$R_{in} = \frac{v_t}{i_t} \Rightarrow \infty$$

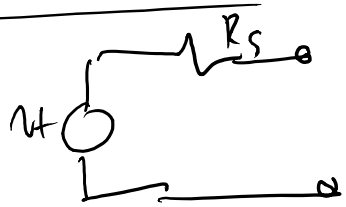

$i_t = 0$

$$A_v = \frac{v_o}{v_i} = -g_m \cdot \underbrace{r_o \| R_D}_{R_{out}}$$

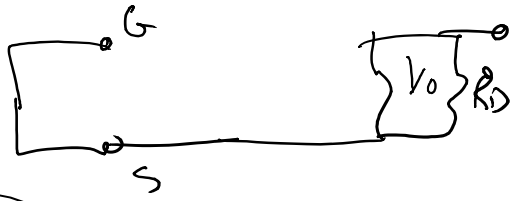

$$A_v = -G_m \cdot R_{out}$$

$G_m = g_m$

Source - follower
or
Common Drain Amp

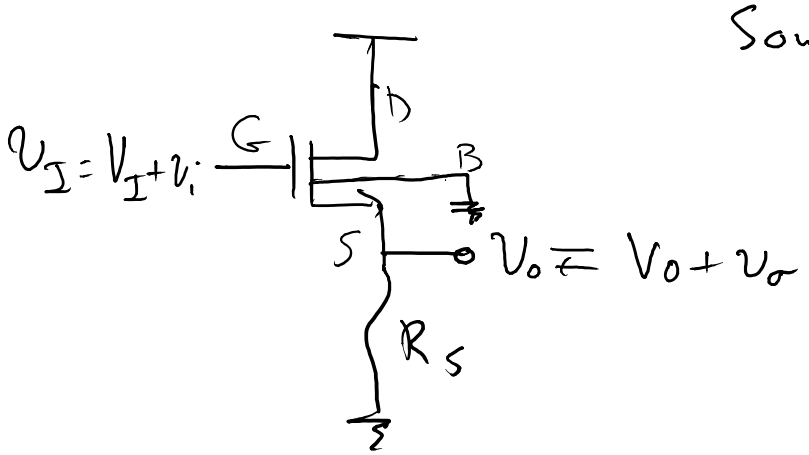

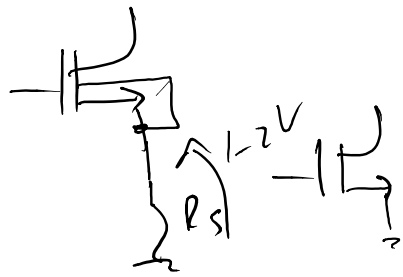

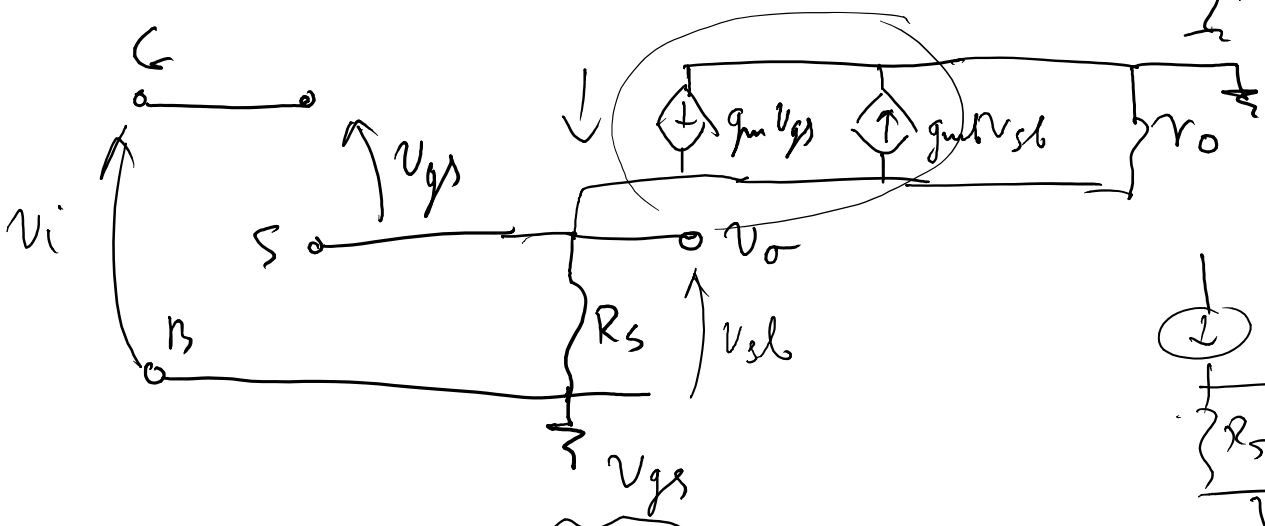

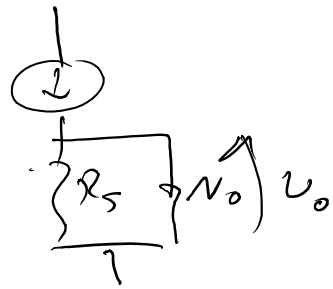

$$v_o = \left(g_m \cdot (v_i - v_o) - g_{mb} \cdot v_o \right) \cdot R_S \| r_o$$

$$v_o \left(1 + (g_m + g_{mb}) \cdot R_S \| r_o \right) = g_m R_S \| r_o \cdot v_i$$

$$\frac{v_o}{v_i} = \frac{g_m R_S \| r_o}{1 + (g_m + g_{mb}) R_S \| r_o}, \quad \text{if } R_S >> r_o$$

$$\frac{v_o}{v_i} = \frac{g_m r_o}{1 + (g_m + g_{mb}) r_o}$$

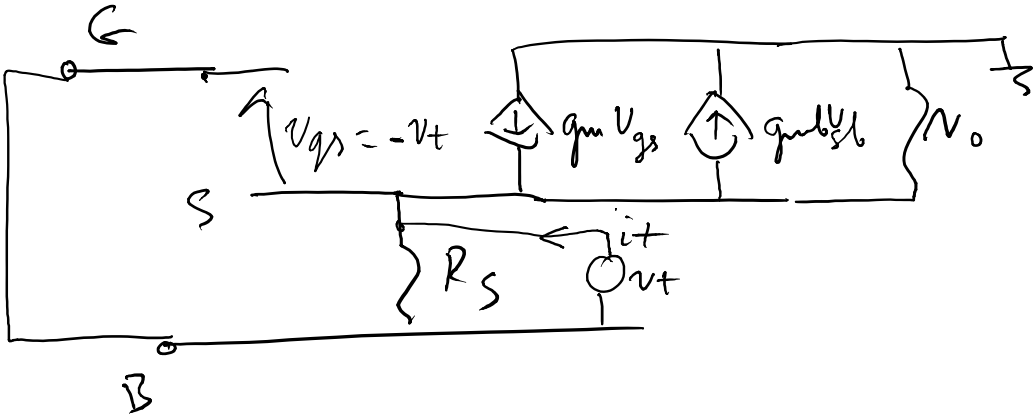

$$i_t = \frac{v_t}{R_S \| r_o} + g_{mb} \cdot v_t - g_m \cdot (-v_t)$$

$$i_t = v_t \underbrace{\left(\frac{1}{R_S \| r_o} + g_m + g_{mb} \right)}_{R_S \| r_o \| \frac{1}{g_m + g_{mb}}}$$

$$R_{out} = \frac{v_t}{i_t} = \frac{1}{g_m + g_{mb}} \| R_S \| r_o$$

$$A_v = -G_m R_{out} = g_m \cdot \underbrace{\frac{\frac{1}{g_m + g_{mb}} \cdot R_S \| r_o}{\frac{1}{g_m + g_{mb}} + R_S \| r_o}}_{R_{out}}$$

$$G_m = -g_m$$

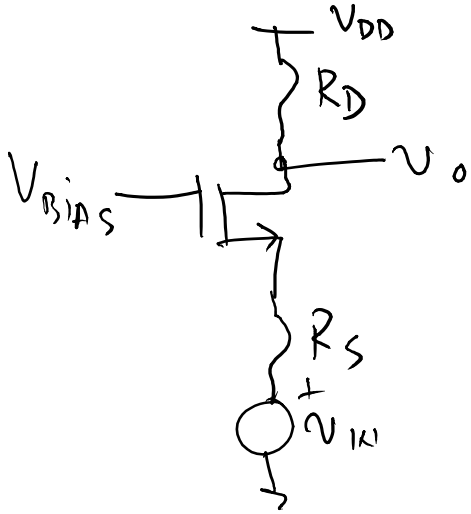

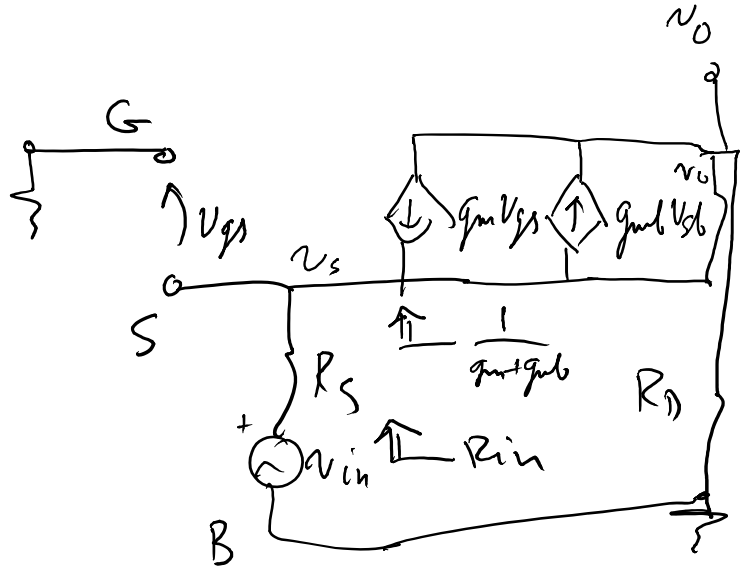

Simplify : $r_o \to \infty$

$$R_{in} = R_S + \frac{1}{g_m + g_{mb}}, \quad R_{out} = R_D$$

$$A_v = \frac{v_o}{v_{in}} = \frac{v_s}{v_{in}} \cdot \frac{v_o}{v_s} = \frac{\frac{1}{g_m+g_{mb}}}{R_S + \frac{1}{g_m+g_{mb}}} \cdot \underbrace{\frac{v_o}{v_s}}_{-G_m R_{out}} = (g_m + g_{mb}) R_D$$

$$\frac{v_o}{v_s} : \quad v_o = -g_m(-v_s) \cdot R_D + g_{mb} \cdot v_s \cdot R_D$$

$$\frac{v_o}{v_s} = (g_m + g_{mb}) \cdot R_D$$

$$\boxed{G_m = -(g_m + g_{mb})}$$

$$A_v = \frac{(g_m + g_{mb}) R_D}{1 + (g_m + g_{mb}) \cdot R_S}$$

In real life $r_o < \infty$

$R_{in} = ?$

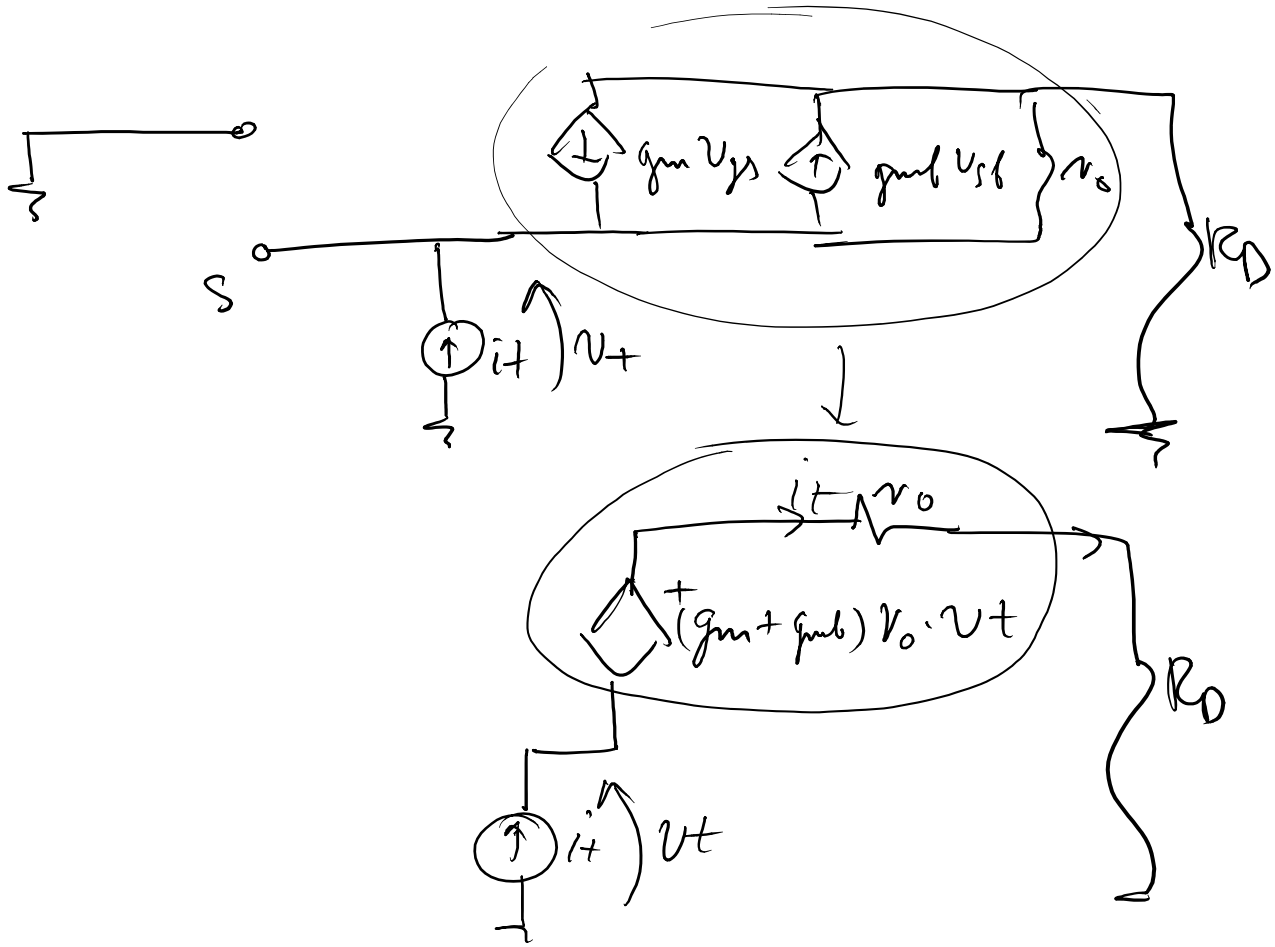

$$v_t = i_t (r_o + R_D) - (g_m + g_{mb}) \cdot r_o \cdot v_t$$

$$v_t \cdot (1 + (g_m + g_{mb}) \cdot r_o) = i_t (R_D + r_o)$$

$$\hat{R}_{in} = \frac{v_t}{i_t} = \frac{R_D + r_o}{1 + (g_m + g_{mb}) \cdot r_o}$$

$$R_{in} = R_S + \hat{R}_{in}$$

Gain with $r_o < \infty$

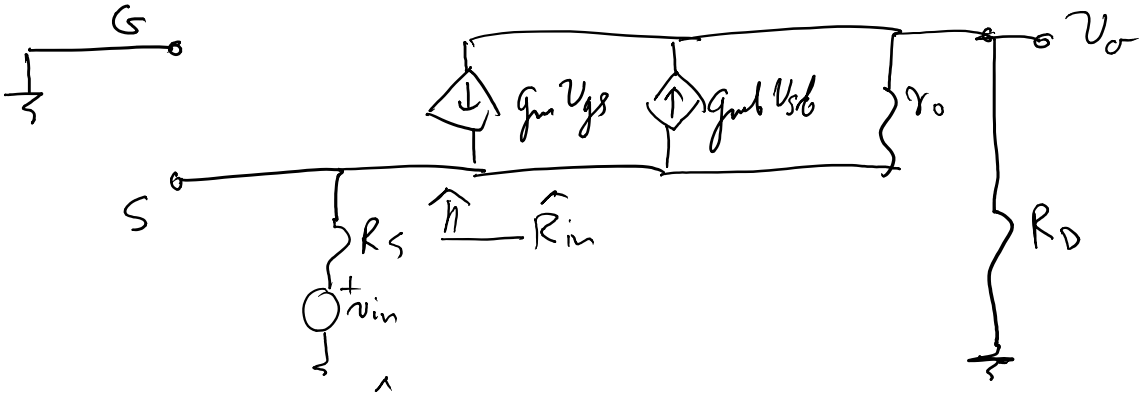

$$\frac{v_o}{v_{in}} = \frac{v_s}{v_{in}} \cdot \frac{v_o}{v_s} = \frac{\hat{R}_{in}}{\hat{R}_{in} + R_S} \cdot \frac{v_o}{v_s} \qquad \hat{R}_{in} = \frac{R_D + r}{1 + (g_m + g_{mb}) r_o}$$

$$\frac{v_o}{v_s} : \quad (g_m + g_{mb}) v_s + \frac{v_s - v_o}{r_o} = \frac{v_o}{R_D}$$

$$\left(g_m + g_{mb} + \frac{1}{r_o} \right) v_s = v_o \cdot \frac{1}{r_o \parallel R_D}$$

$$\frac{v_o}{v_s} = (1 + (g_m + g_{mb}) r_o) \cdot \frac{R_D}{r_o + R_D}$$

$$A_v = \frac{v_o}{v_{in}} = \frac{\dfrac{R_D + r_o}{1 + (g_m + g_{mb}) r_o}}{\dfrac{R_D + r_o}{1 + (g_m + g_{mb}) r_o} + R_S} \cdot (1 + (g_m + g_{mb}) r_o) \frac{R_D}{r_o + R_D}$$

$$A_v = \frac{\cancel{(R_D + r_o)} (1 + (g_m + g_{mb}) r_o) R_D}{(1 + (g_m + g_{mb}) r_o) R_S + R_D + r_o} \cdot \frac{1}{\cancel{r_o + R_D}} = \frac{(1 + (g_m + g_{mb}) r_o) R_D}{(1 + (g_m + g_{mb}) r_o) R_S + R_D + r_o}$$

$$R_{out} = R_S + \left(1 + (g_m + g_{mb}) R_S\right) \cdot r_o$$

$$= R_S\left(1 + (g_m + g_{mb}) r_o\right) + r_o$$

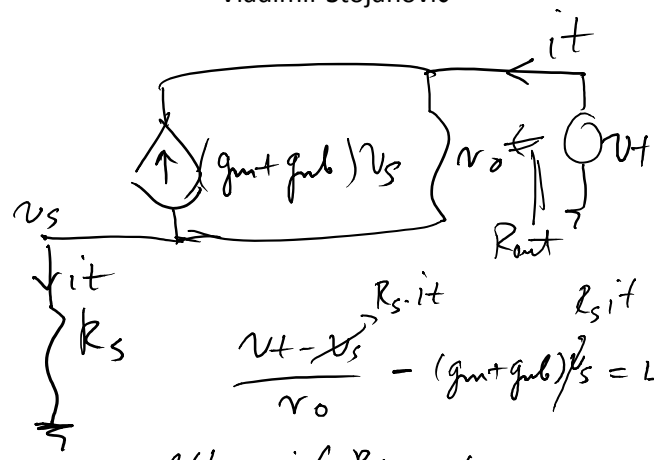

$$\frac{v_t - \overset{R_S \cdot i_t}{v_s}}{r_o} - (g_m + g_{mb})\overset{R_S i_t}{v_s} = i_t$$

$$\frac{v_t}{r_o} = i_t\left(\frac{R_S}{r_o} + (g_m + g_{mb})R_S + 1\right)$$

$$A_v = \frac{\left(1 + (g_m + g_{mb}) r_o\right) \cdot R_D}{R_{out} + R_D}$$

$$= \left(1 + (g_m + g_{mb}) r_o\right) \cdot \frac{R_D}{R_{out} + R_D}$$