Discussion 5

Wednesday, February 27, 2013 3:12 PM

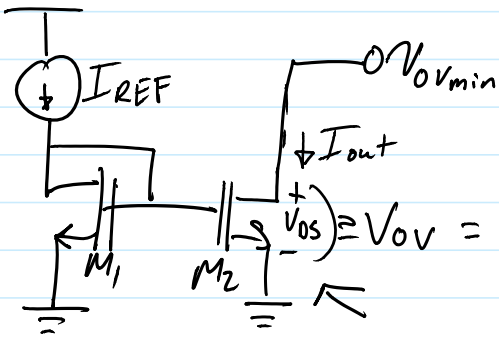

$V_{DS} \cong V_{ov} = V_{gs} - V_t$

$$I_D = \frac{1}{2} k' \frac{W}{L} \underbrace{(V_{gs} - V_{th})}_{V_{ov}}{}^2 (1 + \lambda V_{DS})$$

$$V_{DS2} \neq V_{DS1} \quad (V_{gs_1})$$

$$\frac{I_{out}}{I_{ref}} = \frac{(1+\lambda V_{DS2})}{(1+\lambda V_{gs_1})} \rightarrow I_{out} = I_{REF}\left(\frac{X}{X}\right)$$

Cascode Current Source is used for Stability

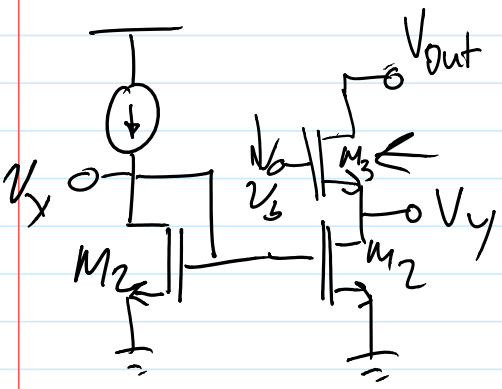

Choose V_b such that $V_y = V_X$

$$\Delta V_y \cong \Delta V_{out} / \underbrace{((g_{m3} + g_{mb3}) r_{o3})}$$

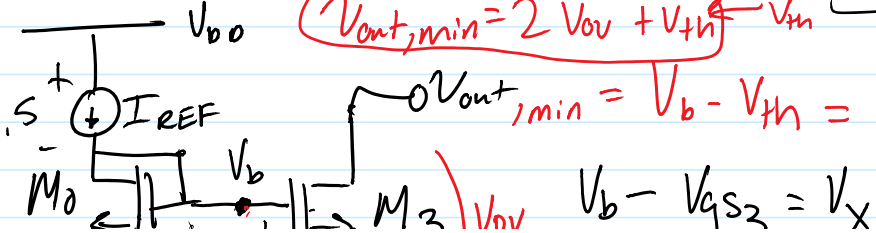

$V_{out,min} = 2V_{ov} + V_{th}$ ← V_{th}

$V_{out,min} = V_b - V_{th} = \underbrace{(V_{gs0} - V_{th}) + (V_{gs_1} - V_{th}) + V_{th}}$

V_{ov}

$V_b - V_{gs_2} = V_X$

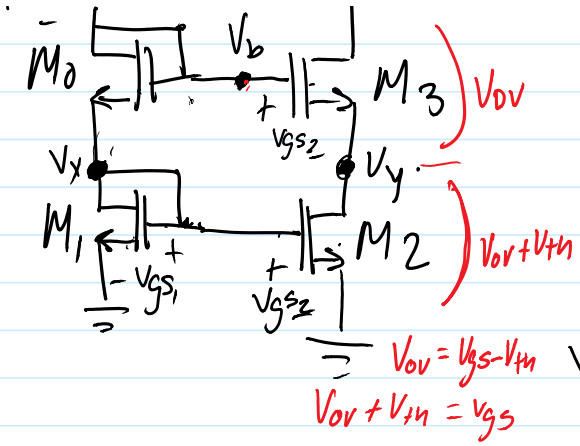

$$V_b - V_{gs_3} = V_x$$

$$V_b = V_{gs_3} + V_x$$

$$V_b = V_{gs_3} + V_{gs_1}$$

$$V_b = V_{gs_0} + V_{gs_1}$$

$$\frac{(W/L)_3}{(W/L)_0} = \frac{(W/L)_2}{(W/L)_1}$$

0.5V to operate I_{REF}

What is the max value of I_{REF}

$$\Rightarrow V_b = V_{gs_1} + V_{gs_0} = \sqrt{\frac{2 I_{REF}}{\mu_n C_{ox}}}\left[\sqrt{\frac{1}{(W/L)_0}} + \sqrt{\frac{1}{(W/L)_1}}\right] + V_{th0} + V_{th1}$$

$$V_{DD} - V_b = 0.5\,V$$

$$I_{REF\,max} = \frac{\mu_n C_{ox}}{2}\,\frac{(V_{DD} - 0.5 - V_{th0} - V_{th1})^2}{\left(\sqrt{(W/L)_0} + \sqrt{(W/L)_1}\right)^2}$$

Cascode wastes 1 V_{th} of headroom

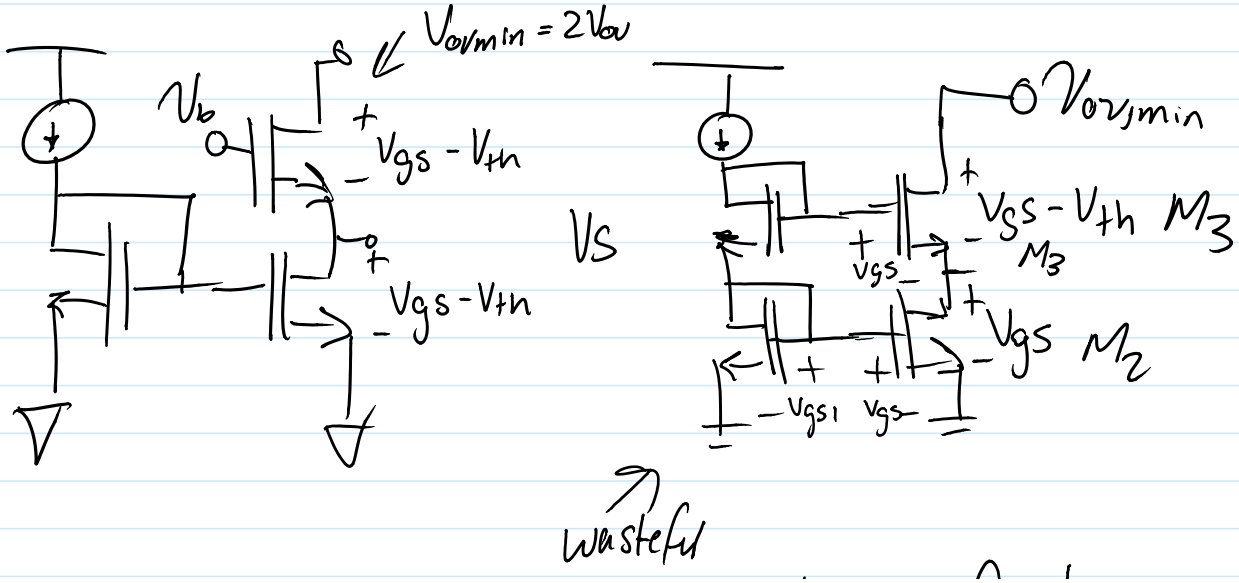

assume M_2 goes into triode first

$V_{DS} \downarrow$ $\quad V_{ds} < V_{gs} - V_{th}$

$k'W/L(V_{gs} - V_t)^2(1+\lambda V_{DS})$ if V_{DS} drops then I_D drop

this means I_{D3} drops while V_{gs3} increases

this is not possible!

$\therefore$ M_3 always enters triode first

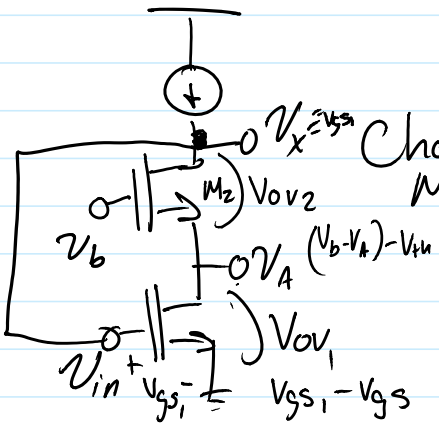

Choose V_b such that M_1 & M_2 are in saturation

$V_b - V_{th} \le V_x$

$V_{gs1} - V_{th} \le V_A = V_b - V_{gs2}$

$V_{gs2} + (V_{gs1} - V_{th1}) \le V_b \le V_{gs1} + V_{th2}$

this means $V_{gs2} - V_{th2} < V_{th1}$

if $V_b = V_{gs2} + (V_{gs1} - V_{th1})$ then both transistors will be @ edge of saturation

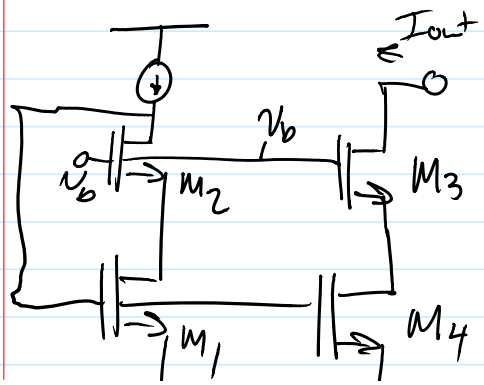

$V_b = V_{gs2} + (V_{gs1} - V_{th})$

$= V_{gs4} + (V_{gs3} - V_{th})$

headroom $= V_b - V_{th4}$

$V_{ov\,min} = (V_{gs4} - V_{th4}) + (V_{gs3} - V_{th3})$

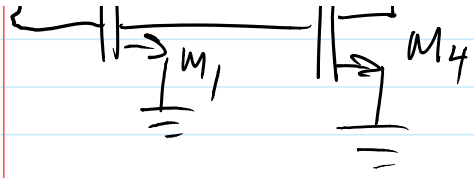

headroom $= V_b - V_{th4}$

$V_{ov_{min}} = (V_{gs4} - V_{th4}) + (V_{gs3} - V_{th3})$

$V_{ov} = (V_{ov} + V_{ov})$

Low Voltage cascode

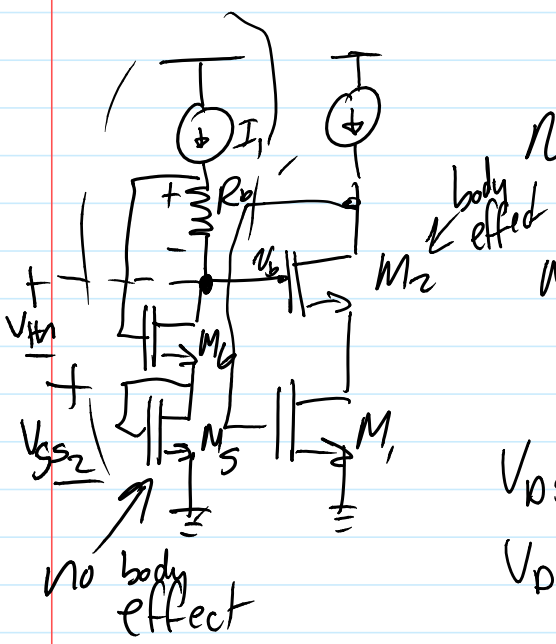

Need $V_b \geq V_{gs} + (V_{gs} - V_{th})$

Make $M_5 = M_2$

$\rightarrow V_{gs_5} = V_{gs_2}$

$V_{DS6} = V_{th}$

$V_{DS6} = V_{gs6} - I_1 R_b = V_{gs6} - V_{th} \simeq (V_{gs} - V_{th})$

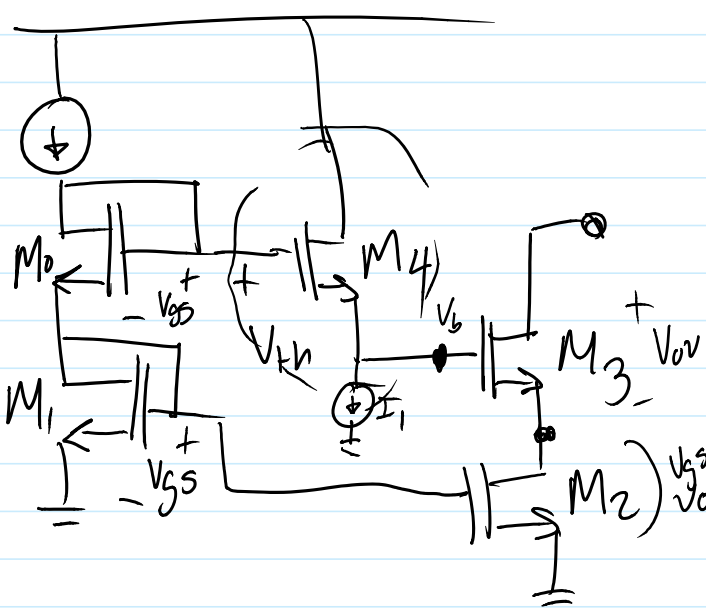

M_4 has low current density

$\frac{I_D}{W/L}$

big

$V_{gs4} = V_{th}$

$V_{DS_2} = 2V_{gs} - V_{th} - V_{gs3}$

$\simeq V_{gs1} - V_{th}$

Now $V_{DS2} \neq V_{DS1}$ ← this is where we get mismatch

HW ⇒ Solve for I_{out} in terms of I_{REF}, I, W/L, λ, γ,

approach $\left(\frac{I_{out}}{I_{REF}}\right)$