Due at 10:00 am, Tues. Sep. 7 in homework box in 240 Cory Hall . Note: up to 2 students may turn in a single writeup.

Reading FPE 2, 3.1-3.2, App. A.

1. (10 pts) BIBO stability

The system $h(t) = cos(t)u(t)$ is not BIBO stable. What is the region of convergence for $H(s)$? A bounded input $x(t) = sin(t)u(t)$ gives an unbounded output for this system. Determine $y(t) = x(t) * h(t)$ using Laplace transform properties.

2. (25 pts) Laplace transform review

For each transfer function below (all are causal and at least marginally stable), determine $h(t)$ and sketch the impulse response. (Pay attention to scales, dynamics, etc.)

i) $H_1(s) = \frac{1}{(s+10)(s+1)}$ ii) $H_2(s) = \frac{s+10}{s+1}$ iii) $H_3(s) = \frac{s-10}{(s+10)(s+1)}$

iv) $H_4(s) = \frac{1}{s^2+2s+101}$ v) $H_5(s) = \frac{s}{s^2+2s+101}$

3. (20 pts) Equivalent models

The figure below shows a mechanical model for a simple resonant wing drive system, where a bending actuator drives a wing through a pulley.

i) Write the transfer function relating input force F_{SL} to output velocity.

ii) Draw the equivalent electrical circuit and determine transfer function from voltage input to current output for the circuit.

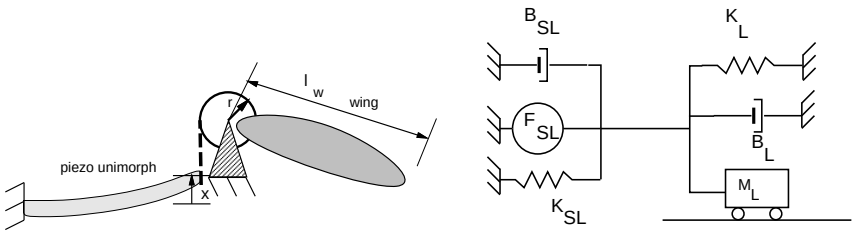

4. (20 pts) Electromechanical system example

A DC motor has electrical constant K_e, torque constant k_t, resistance R_m, inertia J_m and viscous damping b_m. The motor is connected to an inertial load J_L through a shaft with spring constant k_L and the inertial load has viscous damping B_L. Write the equations of motion for the system.

5. (15 pts) Electrical circuit example

For the circuit below, using ideal op-amp assumptions, determine $Z_{in}(s) = \frac{V_{in}(s)}{I_{in}(s)}$, where V_{in} and I_{in} are voltage across and current into Z_{in} node.

6. (10 pts) Block Diagram Manipulation

Using block diagram manipulation, determine $\frac{Y(s)}{R(s)}$. Hint- start reduction at pt. A.

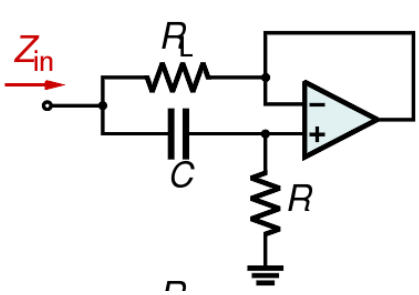

Prob 5.

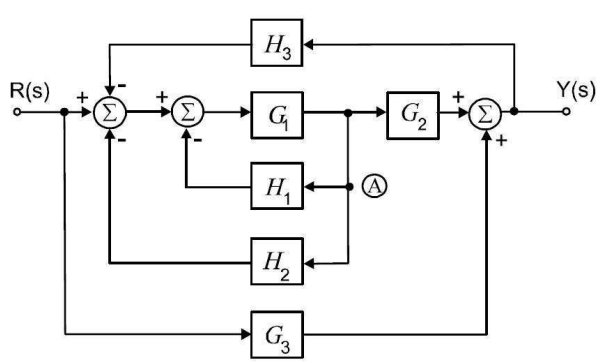

Prob 6.