Fall 2005: EECS126 Final Exam on December 19th, 2005

*No Collaboration Permitted.*

*Declare whether you used the textbook or a sheet of notes.*

*If you used a notesheet, turn it in with your exam.*

Be clear and precise in your answers

**Write your name and student ID number on every page if you want that page graded.**

Come to the front if you have a question.

---

**Problem 1** *(45pts) True or False. Prove or show a counterexample:*

*a. 15pts. If random variables $X, Y, Z$ are pairwise independent, then they are independent.*

*b. 15pts. Let $A$ and $B$ be events. If $P(A \cap B) > 0$, then $P(B|A) = P(A|B)$.*

*More space:*

c. *15pts* *Let $X$ be a nonnegative random variable (i.e. $P(X < 0) = 0$). If $E(X^2) < \infty$, then $E(X) < \infty$ as well.*

**Problem 2** *Wireless channels(50pts) An inter-building wireless communication system is built between Soda and Cory. Suppose that having a truck drive through the area mixes up the air and causes the wireless channel to change to a new state, at least until the next truck drives by and mixes it up again. If no truck drives through, the channel remains unchanged. Time is modeled discretely into seconds, and every time the wireless channel changes, it is modeled as taking a value from an independent standard Gaussian random variable. The arrivals of trucks are modeled as being iid across time and represented by a Bernoulli process with parameter p.*

*The above model can formally be stated as follows. Given iid Bernoulli random variables* $B_i$, $i = 1, 2, ...$ *where* $B_i$ *is a Bernoulli random variable* $P(B_i = 1) = p$ *and iid Gaussian random variables* $N_i \sim N(0, 1), \quad i \geq 0$. *Define a new collection of random variables representing the channel state* $X_i, \quad i \geq 0$ *by setting* $X_0 = N_0$ *and for* $i > 0$*:*

$$X_i = \begin{cases} X_{i-1} & : \quad \text{if } B_i = 0 \\ N_i & : \quad \text{if } B_i = 1 \end{cases} \tag{1}$$

*a. 10pts. Derive the pdf for* $X_i$. *(Hint: condition on* $B_1, ...B_i$*)*

*b. 10pts. Are* $X_1, X_2$ *jointly continuous, why or why not?*

c. 15pts. *Suppose you want to estimate $X_{n+1}$ based on the having observed $X_0, ...X_n$, what is the LLSE estimator of $X_{n+1}$ given $X_0, ...X_n$? What is the expected squared error for that estimator?*

*d. 15pts Repeat part (c) for the MMSE instead of the LLSE.*

**Problem 3** *(55pts) Bernoulli Processes, Gambling, and Laws of Large Numbers.*

*You are gambling on iid coin tosses in Las Vegas. If you bet $x$ dollars, and the outcome is a head, you win and recover your bet plus another $x$ dollars. If the outcome is a tail, you lose and get only half your bet back. The coin is unfair with $P(Head) = \frac{2}{5}$.*

*The house is willing to extend credit indefinetly, and so you are allowed to have a negative amount of money and still continue gambling. Furthermore, assume that money is infinitely divisible and so all real numbers are allowed for bets, returns, and stakes.*

a. *10pts. Suppose you start with a stake of only one dollar and bet it all on the game. Calculate the expected amount of money you will have after one coin toss. What is the variance?*

b. *20pts. Suppose you decide to play the following strategy, starting from a stake of one hundred dollars.*

You bet one dollar every time, borrowing from the house if necessary.

*After playing the game for* 1000 *times, give an approximation to the probability that you have more than* 210 *dollars? (use central limit theorem, write the probability in terms of* $Q(n) = P(N \leq n)$*, where* $N$ *is a standard Gaussian random variable)*

*What is the approximate probability that you will have more than* 300 *dollars (use a Chernoff bound)?*

c. 10pts. *Suppose you decide to play a different strategy, starting from the same stake of one hundred dollars.*

You bet it all and let it ride every time. (ie. At every time step, you bet all the money you have on the next toss of the coin.)

*What happens to your money as the game goes forever? Prove either convergence (and what it converges to) or divergence of the amount of money in probability? (Hint: logarithms are your friends.)*

*d. 15pts. Suppose you decide to play a different strategy, starting from the same stake of one hundred dollars.*

You bet a third of what you have on the game. (ie. At every time step, you bet a third of all the money you have on the next toss of the coin.)

*What happens to your money as the game goes forever? Prove either convergence (and what it converges to) or divergence of the amount of money in probability? (Hint: logarithms are your friends in the proof, but you might prefer to do some multiplications to see what the numbers are like.)*

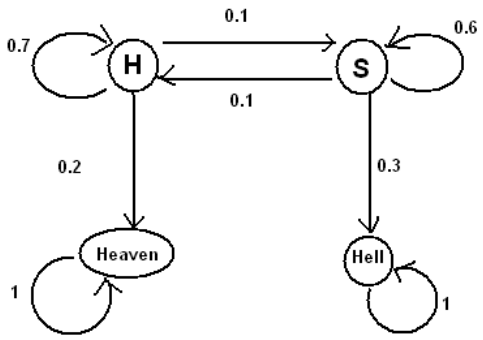


Figure 1: Markov Chain 1

**Problem 4** *(50pts) Markov Chains*

*Suppose there is a Markov chain $X$ with the transition graph as shown in the Fig1.*

*a. 10pts. Classify all the states (recurrent, transient, periodic [give periodicities], aperiodic). Describe all possible steady-state distributions for this Markov chain.*

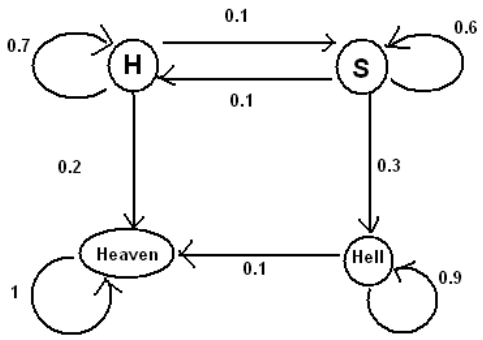


Figure 2: Markov Chain 2

*b. 10pts. Repeat part (a) for the Markov chain shown in Fig.2.*

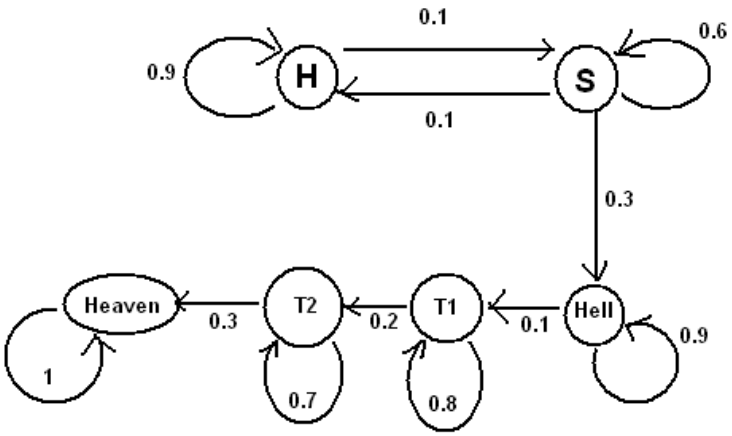


Figure 3: Markov Chain 4

c. *15pts. Suppose the Markov chain is as shown in Fig.3 Calculate* $P(X_n = Heaven|X_0 = Hell)$ *for arbitrary* $n$

d. *15pts* *Suppose that for every time you spend in Hell, you accrue* $1$ *unit of pain while every unit of time in* $T1$ *accrues* $2$ *units of pain and every visit to* $T2$ *accrues* $3$ *units of pain. Suppose you start in Hell at time* $1$*. Heaven accrues no pain. What is the expected total amount of pain you will accrue? What is its variance?*