UNIVERSITY OF CALIFORNIA
College of Engineering
Department of Electrical Engineering and Computer Sciences

EE 105 Prof. Pister
Spring 2012

LAB 8 – Cascode, Biasing, Feedback

NAME:
SID:
Section:

For all of the questions in this lab, I'm looking for *rough* answers. A single digit of precision is usually fine. Both circuits 1A and 1B are different implementations of the amplifier with idealized current source in 1C.

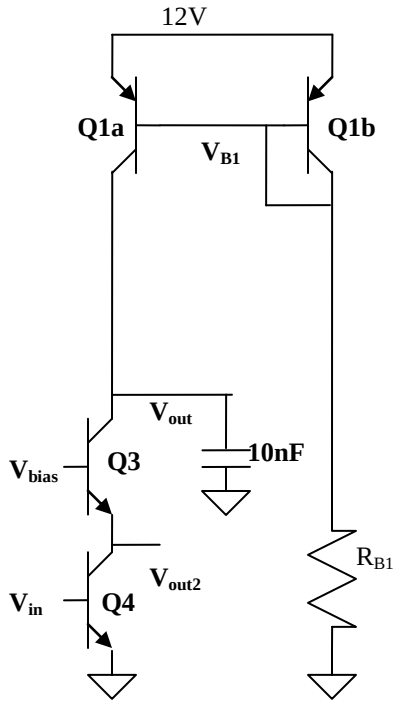

Figure 1A

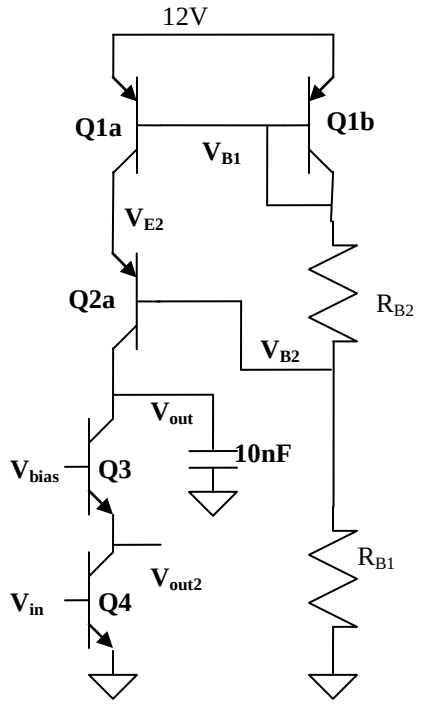

Figure 1B

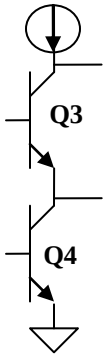

Figure 1C

1. For the circuit in Figure 1A,
   a. Estimate the voltage at node V_{B1} to within a few hundred mV (think "Q1b is a diode"), and the value of R_{B1} necessary so that roughly 1mA is flowing through Q1b.

V_{B1}:	**R_{B1}:**

Assume that V_{in} is roughly 700mV, V_{bias} is roughly 2V, and V_{out} is roughly 5V.

   b. Estimate the voltage at V_{out2} (V_{be3} below V_{bias}).

V_{out2}:

   c. If V_A=20V for all devices, and all devices are at room temp, calculate the g_m and r_o for all devices

g_m:	**r_o:**

   d. Calculate the impedance seen "looking up" and "looking down" at V_{out}, and the approximate overall impedance at that node

R_{outup}:	**$R_{outdown}$:**	**R_{out}:**

e. Calculate the impedance seen "looking up" and "looking down" at V_{out2}, and the approximate overall impedance at that node

R_{out2up}:	$R_{out2down}$:	R_{o2}:

f. Calculate the expected output pole frequency for the output with a 10nF load.

ω_p:

g. Calculate the block G_M from the input to the output and output2, and the unity gain frequency to the output

G_M:	G_{M2}:	ω_u:

h. Calculate the expected low-frequency gain from the input to both outputs

A_V:	A_{V2}:

2. Now build circuit 1A, and try to measure those two gains at DC, and vs. frequency. From your calculations, hopefully you found that the gain from the input to the output is close to 1000, so it's going to be tough to bias that one!
   a. Start with a DC bias of 1.5V--2V on Vbias. Apply a 1kHz triangle wave from 0 to 0.8V on the input. Use channel 1 on the oscilloscope to monitor the input, and channel 2 to monitor the output, and put the scope into XY mode. Repeat for output2. Compare your plots to the spice simulation and show your TA. Note the input bias required to get the output to be ~6V.

TA	$V_{in,bias}$:	A_V:	A_{V2}:

   b. Now go back to normal mode on the scope, and plot the input, Vout, Vout2, and V_{B1} vs. time.
      i. Make sure that you have a 10nF capacitor on the output.
      ii. Apply a very small amplitude sine wave to the input, with a DC bias equal to what you recorded from the previous part. Make sure that the DC output level is roughly 6V. This can be hard because the gain is so high, so be careful. It will be easier to set your DC bias right using an AC signal that is 100kHz or higher. That way the AC gain won't be so big, and you won't be clipping your signals.
      iii. vary the frequency of your sine wave and find the unity gain frequency.
      iv. Plot the magnitude and phase vs. frequency near the unity gain frequency on the high end, and down to the lowest frequency where the amplifier doesn't clip the output on the low end. Do this for both outputs.

3. Now we move on to a really high gain circuit, Figure 1B. If we want V_{E2} to be about 0.5 to 1V below the top rail, what voltage do we need to apply at V_{B2} (think "V_{BE} diode") and what value do we need for R_{B2}?

V_{B2}:	R_{B2}:

Your G_Ms will be the same as for 1A, but the R_os go up a lot.

   a. Calculate R_{o1} and R_{o2}

R_{o1}:	R_{o2}:

   b. Calculate the expected output pole frequency and unity gain frequency for the output with a 10nF load.

ω_p:	ω_u:

   c. Calculate your expected gains

A_V:	A_{V2}:

4. Now build the circuit in Figure 1B. Measuring the gains for this circuit can be hard, as you try to keep all of the devices in forward active.
   a. First, make sure that your bias voltages are all correct. V_{B1} should be a diode drop below the top rail. V_{E2} should be 0.5--1V below the top rail (to ensure that Q1a/b stay in saturation).

V_{B1}:	**V_{E2}:**	**V_{B2}:**	**V_{bias}:**

   b. Measure the two gains using the same method as in part 2a, and compare your plos to the spice simulation

A_V:	**A_{V2}:**

   c. Getting the DC bias right on the input is going to be almost impossible, so we'll use feedback to make it easier. Trading off gain in the process.
      i. Add a 1Meg resistor R_F from the input to the output.
      ii. Apply a small amplitude sine wave through a 100k input resistor R_I. DC bias the input sine wave at roughly the same voltage as in part 2a. Make a Bode plot of the gain to the output, and to output2.

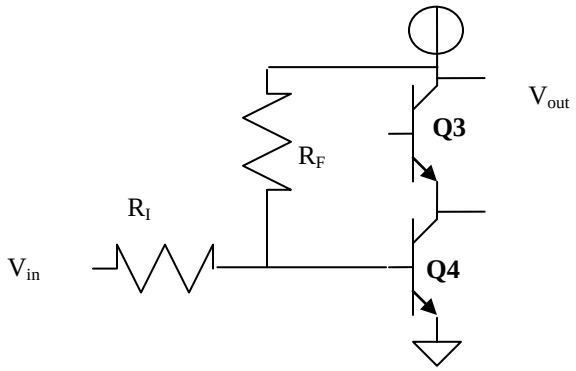

Did the unity gain frequency change from the circuit in Figure 1A to the feedback amplifier in part 4? Why? The low frequency gain changed a lot. Why?