UNIVERSITY OF CALIFORNIA
College of Engineering
Department of Electrical Engineering and Computer Sciences

EE 105 Prof. Pister
Spring 2011

Lab 7 – Frequency response

Name:
Section:

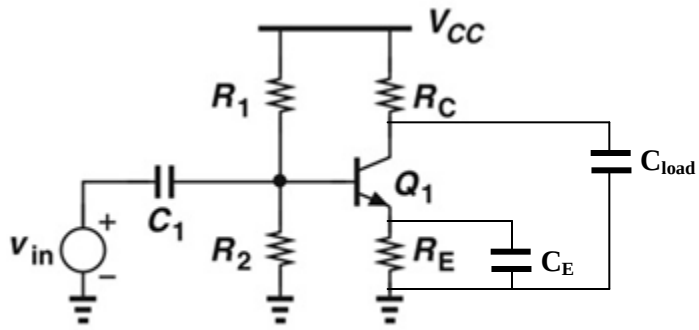

(a)

The goal of this lab is for you to measure the frequency response of all three types of single-transistor BJT amplifiers: CE, CC, and CB. For these experiments, it will be convenient to have a scope probe attached to the input node, as well as one on each terminal of the BJT. You'll measure the magnitude and phase at the output node relative to the input sine wave. The instructions below are meant to guide you through this process, but you may need to be a little creative to get the data that you need, especially in the high-gain frequency range. Make sure that you get at least one measurement per decade, and one measurement at each pole or zero location (where you get 45 degrees of phase shift).

Build the common emitter amplifier above, with R_C=10k, R_E=1k, R_2=100k, and V_{CC}=10V, choosing R_1 such that the output bias voltage is roughly 5--6V.

1. Using the oscilloscope, measure the gain (attenuation) from v_{in} to v_b using a 100mV amplitude sine wave.

a. Find the frequency at which the output v_b has a 45 degree phase shift from the input. How does it compare to your calculated value for ω_{pin} from the prelab? What is the gain to v_b at this frequency?

b. Vary the DC bias of v_{in}. Does the DC bias have any impact on the gain, phase, or pole frequency? Why or why not?

c. Measure the gain and phase shift for an input at 10 times your measured ω_{pin}, and one tenth your measured ω_{pin}. At each of these frequencies, measure the gain and phase shift from v_{in} to v_e, and measure the gain and phase shift from v_{in} to v_c. Plot these points.

d. Over this range of frequencies, did the gain from v_b to v_c remain constant? Did the gain from v_b to v_e remain constant? Why?

e. Have your TA look over your results, discuss any questions that you may have, and initial.

TA initials

2. For frequencies above ω_{pin} there should be a relatively flat gain of roughly -10 (magnitude 10, phase -180) from v_{in} to v_c.

a. Find the frequency at which this gain increases in magnitude by sqrt(2), and measure the magnitude and phase at that frequency, and at ten times that frequency. How does this compare to ω_{pE} that you calculated in the prelab?

b. Find the highest gain magnitude from input to collector. To do this, you may need to put a voltage divider on the output of your function generator. Find the lowest and highest frequencies at which the gain is within sqrt(2) of your maximum gain. How close are these to your prelab calculations for ω_{pGM} and ω_{pout} ?

c. Measure the magnitude and phase of the gain at 10^8 rad/sec. Did the gain fall by as much as you would expect ($10^8/\omega_{pout}$)

TA initials

Discuss your results for part 2 with your TA, and get his initials.

3. Bode plot from v_{in} to v_c. (common emitter)

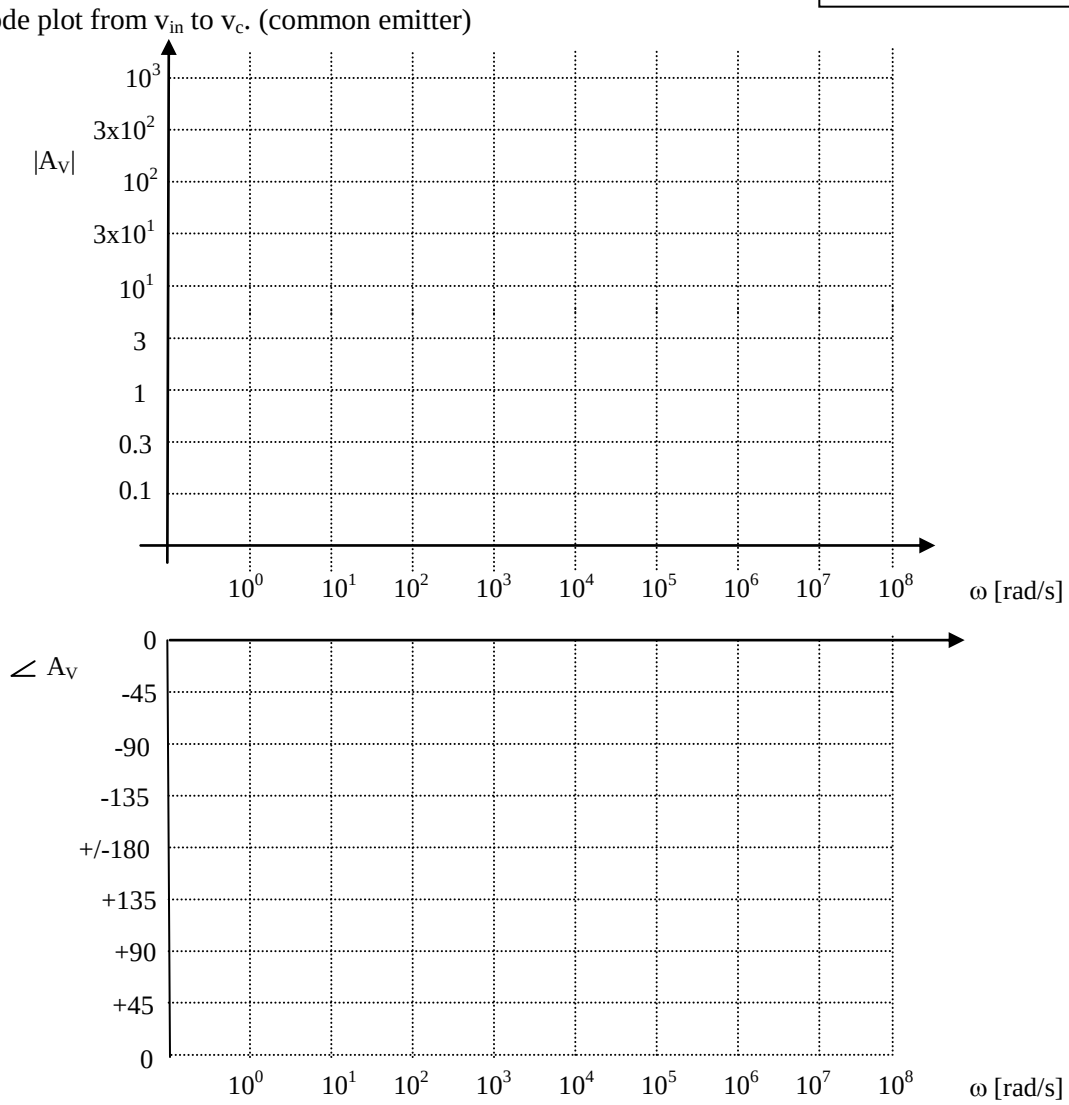

4. Bode plot from v_{in} to v_e. (common collector or emitter follower)

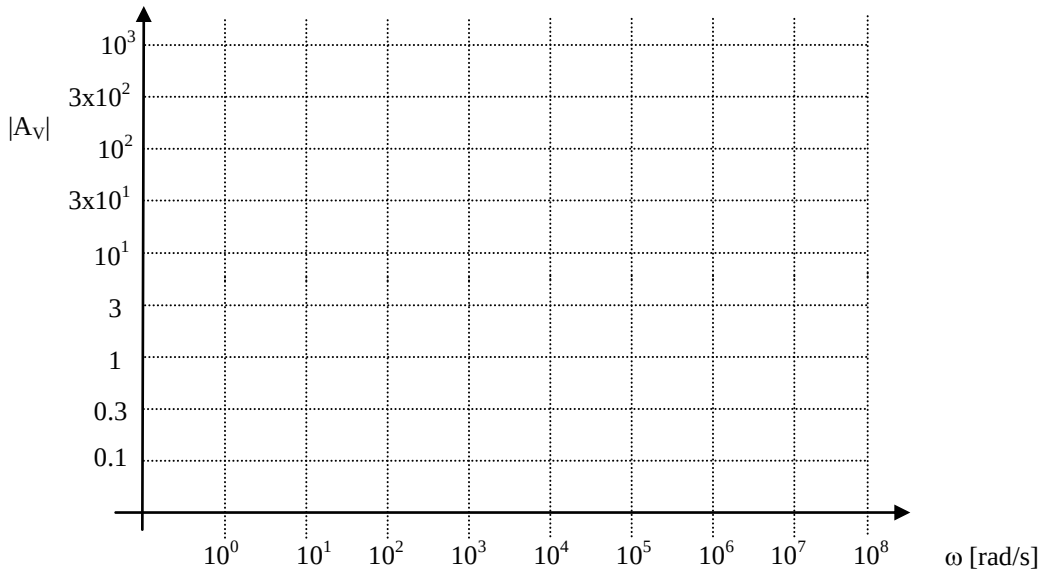

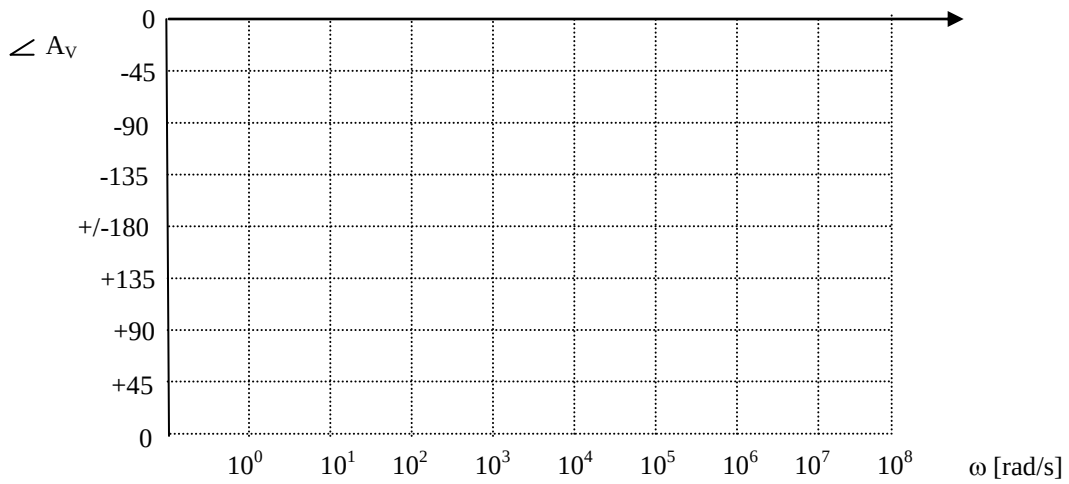

5. Common base. Now hook the input up to the emitter, and set the offset voltage on the signal generator so that your bias point is around 5—6 V. Measure the magnitude and phase of the gain to the collector and plot.