EE 105 | Final Review

Kieran Peleaux & Qianyi Xie

Outline

- Exercise 1
  - Op-Amp
  - Feedback
  - Bode plot
- Exercise 2
  - Semiconductor physics
- Exercise 3
  - Device structures and operation
    - BJT & MOSFET
  - Large signal operation (DC operating point)
  - Small signal operation

Outline

- Exercise 4
  - Multi-stage amplifier analysis
    - Inspection analysis
    - Miller effect
    - Mid-band gain
    - High corner frequency (OCTC)
    - Low corner frequency (SCTC)
    - Small-signal limitation and output swing
- Exercise 5
  - Differential pair analysis
- Digital circuit overview and CMOS logic circuit design

Exercise 1 – Ideal Op-amps

- Ideal Op-amp laws

1. $R_{in} = \infty$
2. $R_{out} = 0$
3. $A_v = \infty$

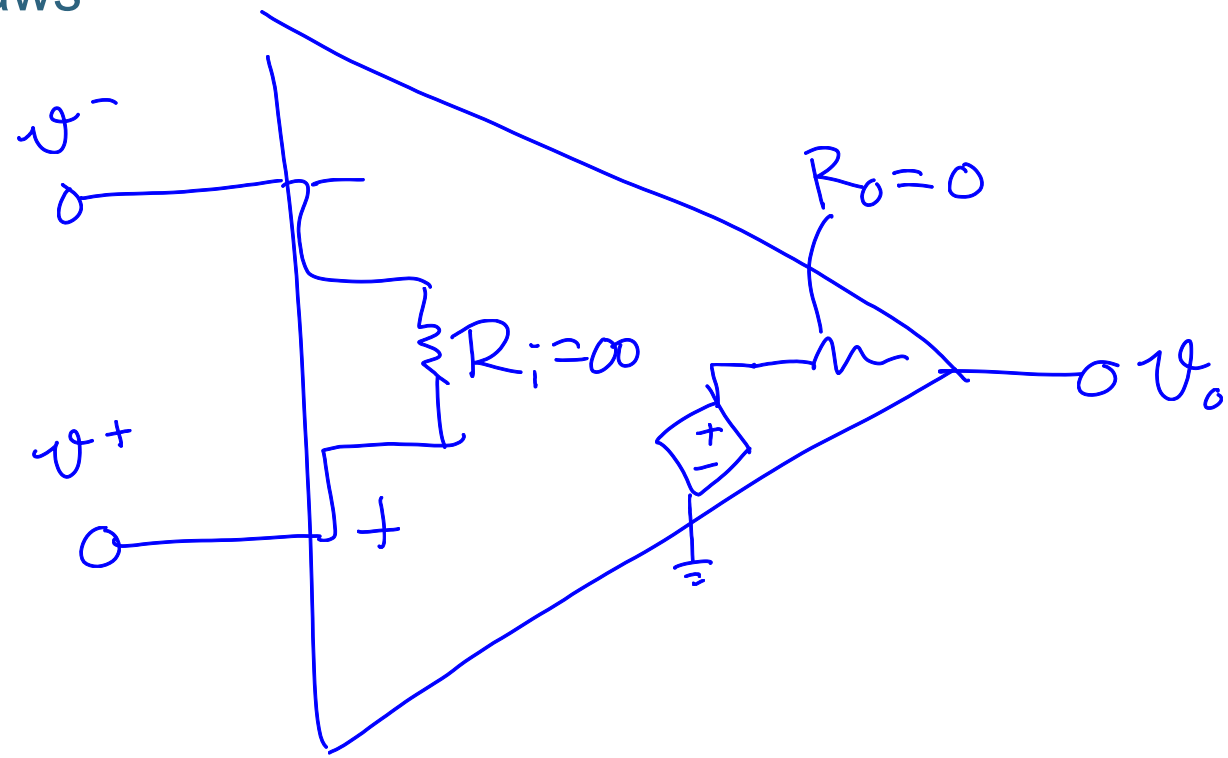

finite ∞

$$v_o = A_v (v^+ - v^-) \rightarrow 0 \quad \therefore \; v^+ = v^- \text{ only in negative FB}$$

Exercise 1 – Basic Op-amp Configurations

1. Inverting Amplifier

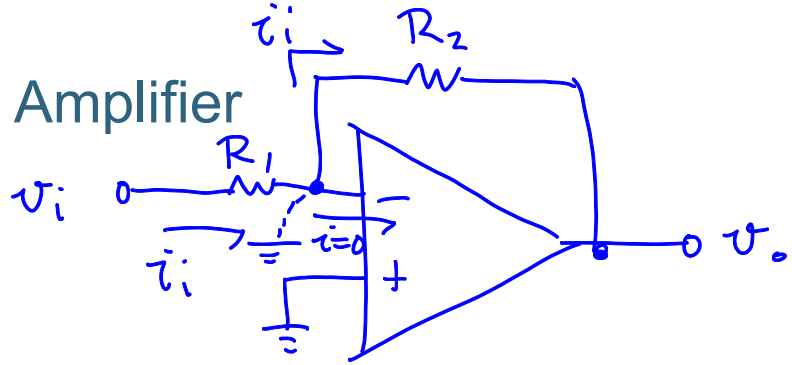

$$\frac{v_o}{v_i} = -\frac{R_2}{R_1}$$

2. Non-inverting Amplifier

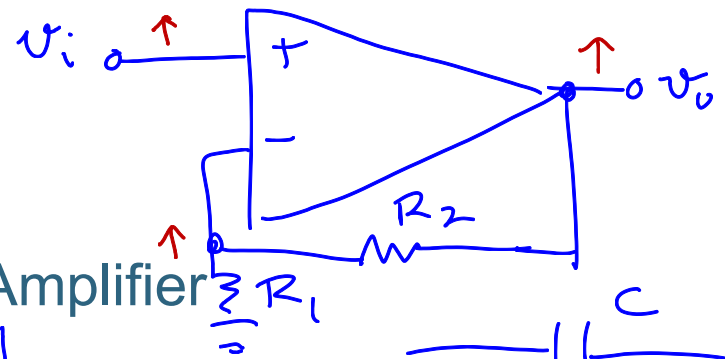

$$\frac{v_o}{v_i} = 1 + \frac{R_2}{R_1}$$

3. Integrating Amplifier

$$i_i = \frac{v_i}{R} \qquad v_o = 0 - i_i \frac{1}{sC}$$

$$v_o = -\frac{v_i}{sRC} \Rightarrow \frac{v_o}{v_i} = -\frac{1}{sRC}\, v_i$$

$j\omega = 0$ @ DC $\rightarrow \frac{1}{\omega_p}$

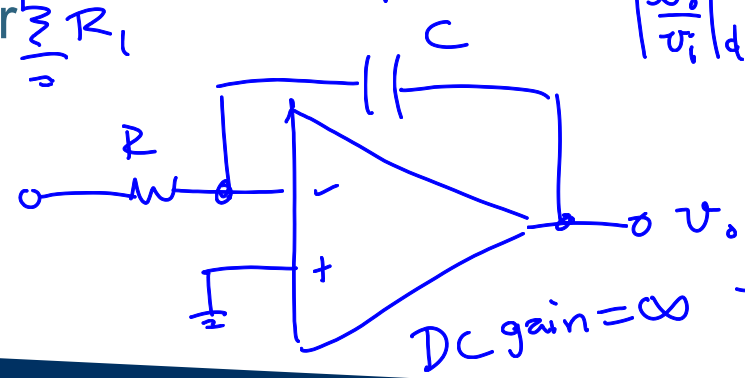

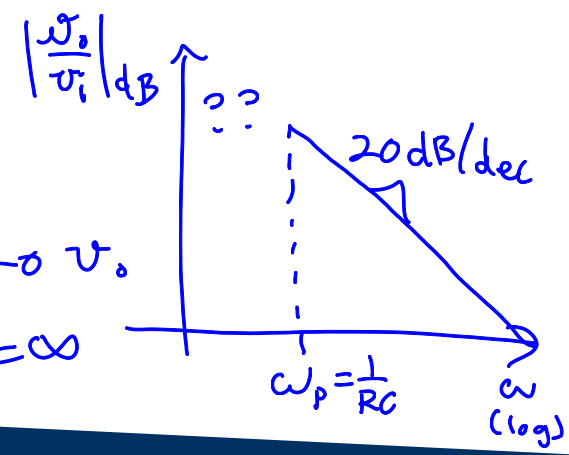

Exercise 1 –Op-amp Nonidealities

Input offset voltage

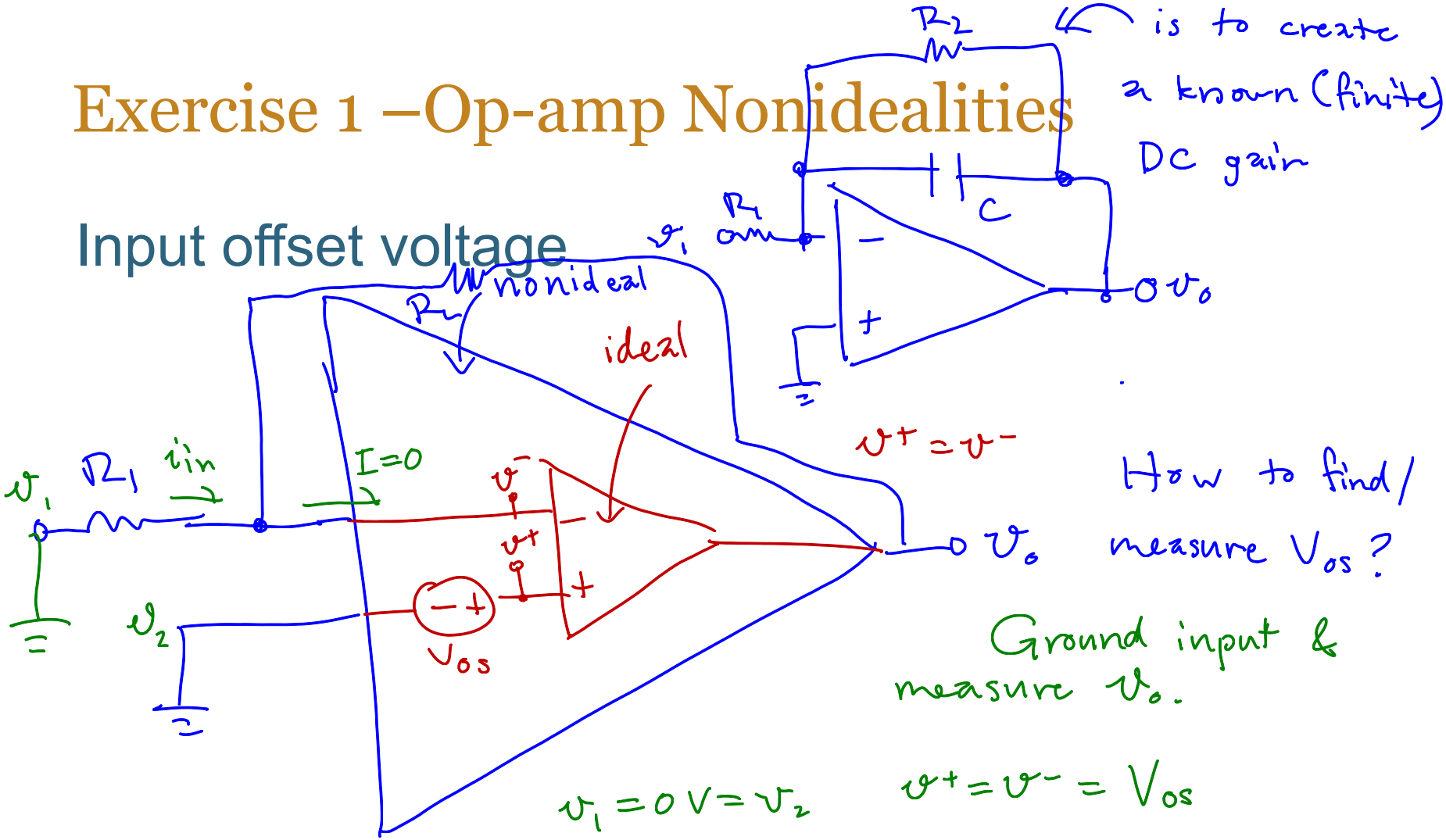

How to find/measure V_{os}?

Ground input & measure v_o.

$v_1 = 0\,V = v_2$ $\qquad v^+ = v^- = V_{os}$

$$i_{in} = \frac{v_1 - V_{os}}{R_1} = \frac{-V_{os}}{R_1}$$

$$v_o = V_{os} - i_{in}R_2 = V_{os} + \frac{R_2}{R_1}V_{os}$$

get this from measure V_o

Exercise 1 –Op-amp Nonidealities

Finite Gain $A_v \neq \infty$ (open loop gain)

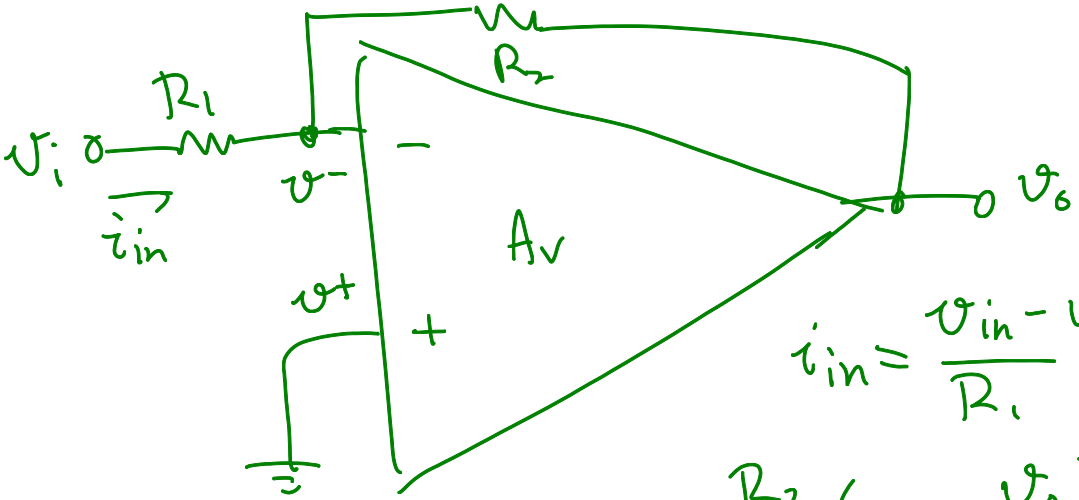

$$v_o = A_v(v^+ - v^-) = -A_v v^-$$

$$v^- = -\frac{v_o}{A_v}$$

$$i_{in} = \frac{v_{in} - v^-}{R_1} = \frac{v^- - v_o}{R_2}$$

$$\frac{R_2}{R_1}\left(v_{in} + \frac{v_o}{A_v}\right) = -v_o\left(1 + \frac{1}{A}\right)$$

$$\frac{v_o}{v_i} = \left|\frac{(-R_2/R_1)}{1 + \frac{(R_2/R_1 + 1)}{A_v}}\right| < \left|-\frac{R_2}{R_1}\right|$$

closed-loop gain if $A_v = \infty$

$$A_v \to \infty \Rightarrow \frac{v_o}{v_i} = \frac{-R_2}{R_1}$$

Exercise 1 –Op-amp Nonidealities

$R_1 \parallel R_2$ to eliminate effects of

Input Bias Current (& Offset)

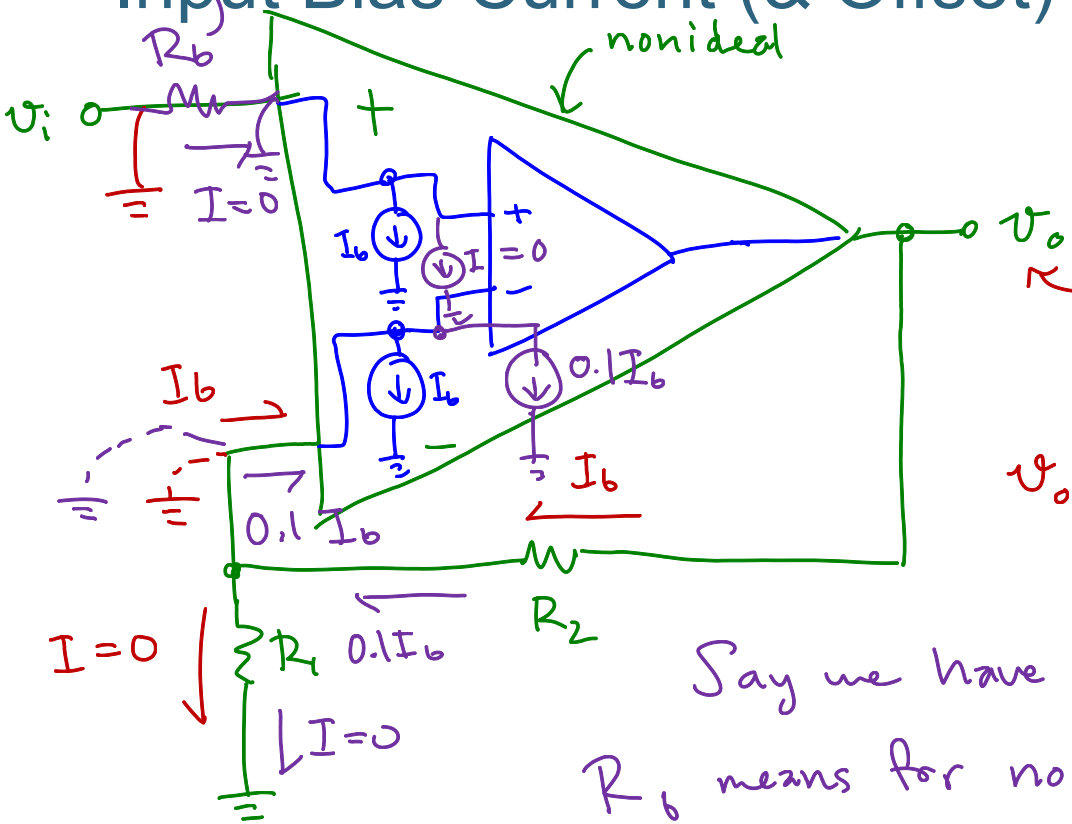

measure for $v_{in} = 0$ V

$v_o = I_b R_2$ (when)

Say we have 10% I_{bias} offset...

R_b means for no-offset case, $v_o = \emptyset$

$v_o = (0.1 I_b) R_2$

Exercise 1 –Frequency Response & Bode Plots

Generic 1 & 2-pole systems

$$H(s) = \frac{-A_{DC}}{1 + s/\omega_p}, \quad \omega_p = \frac{1}{RC}$$

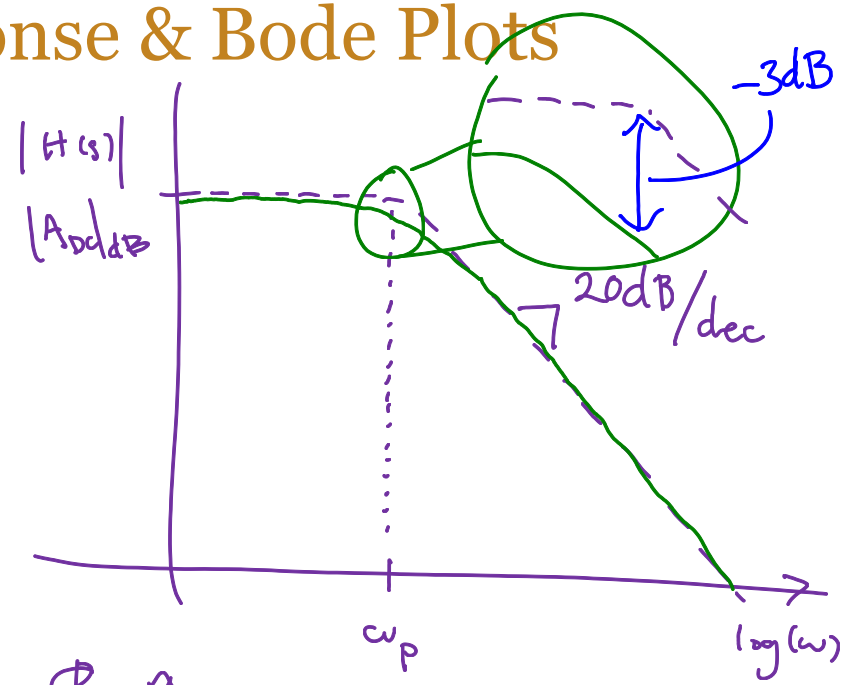

$$H(s) = \frac{-A_{DC}}{\left(1 + \frac{s}{\omega_{p1}}\right)\left(1 + \frac{s}{\omega_{p2}}\right)}$$

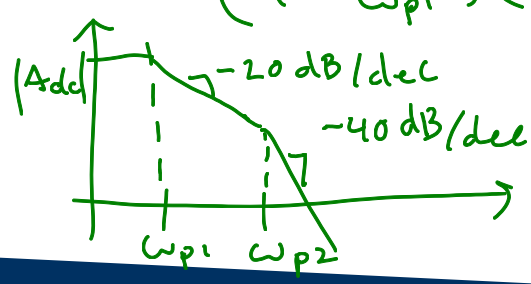

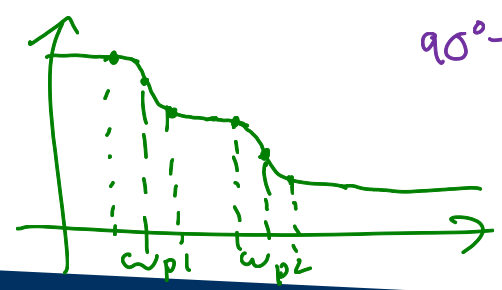

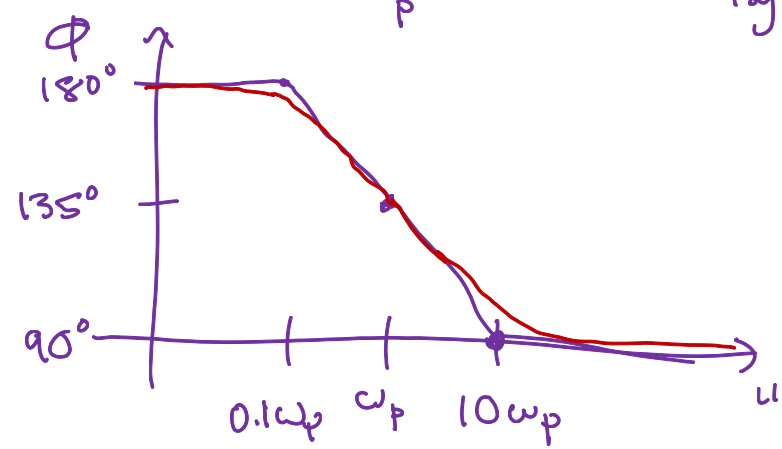

Exercise 2 –Semiconductor Physics

N & P-Type Semiconductors

acceptors ("accept" $e^- \rightarrow h^+$) $[N_A \{cm^{-3}\}]$

dopants are donors ("donate" e^-) $[N_D \{cm^{-3}\}]$

Exercise 2 –Semiconductor Physics

PN Junctions

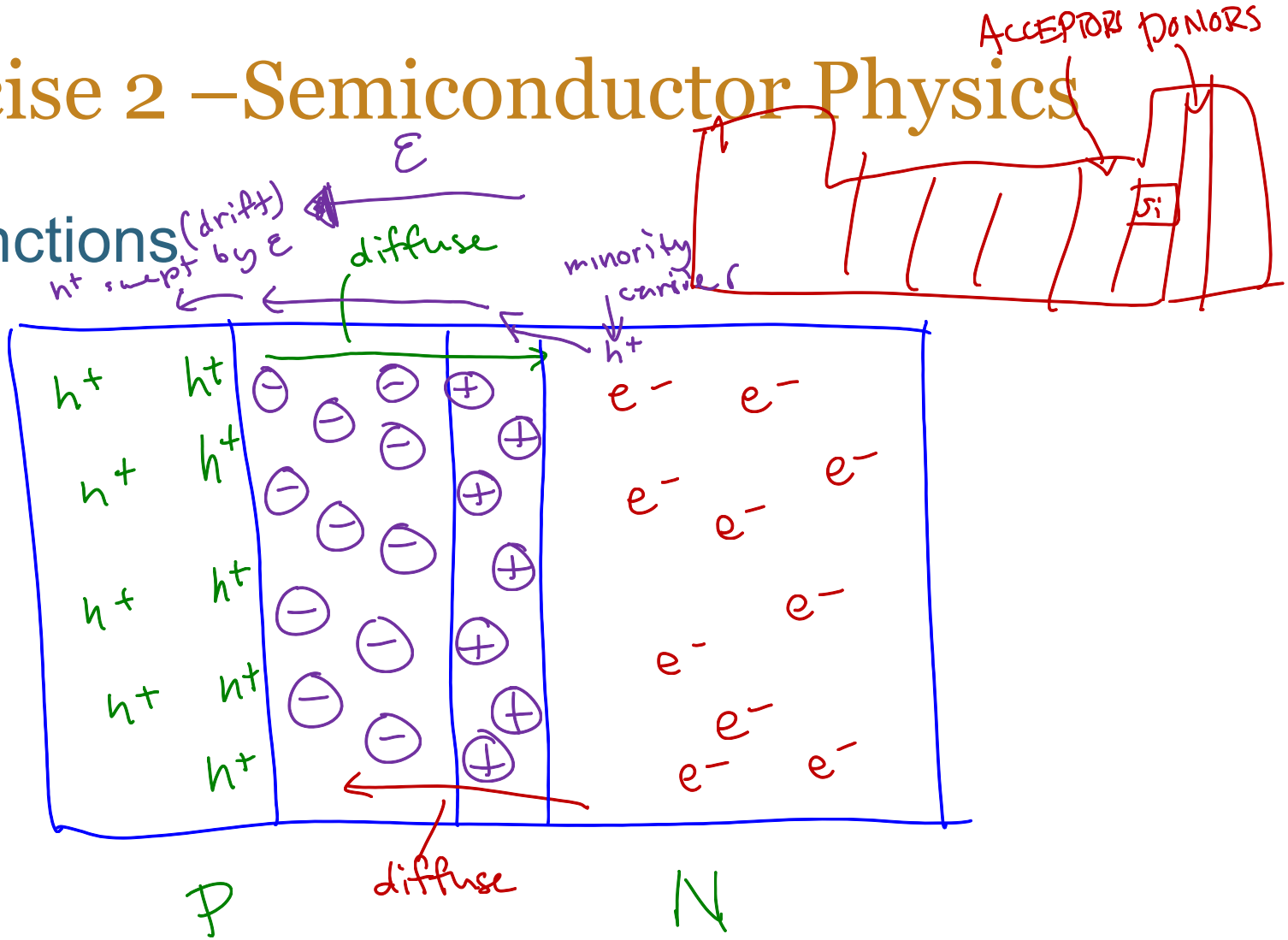

$Q_p = Q_N = f(N, \text{Volume})$

$N \rightarrow p\downarrow$, $N\uparrow$

$N \rightarrow P\uparrow \therefore W_p\uparrow$, $N\downarrow \therefore W_N\downarrow$

Exercise 2 –Semiconductor Physics

PN Junctions with external energy

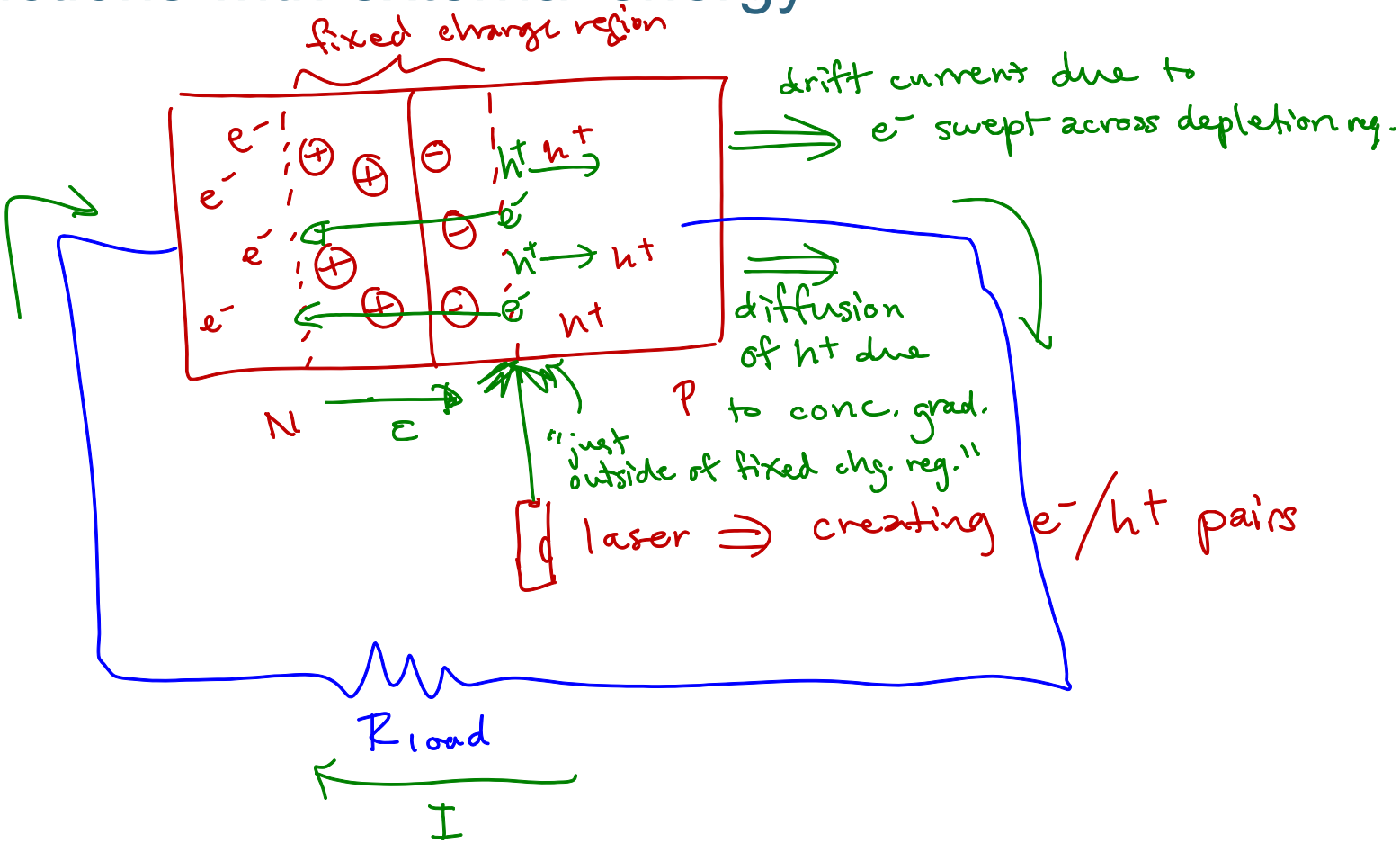

Exercise 3

- Exercise 3
  - Device structures and operation
    - BJT & MOSFET
  - Large signal operation (DC operating point)
  - Small signal operation

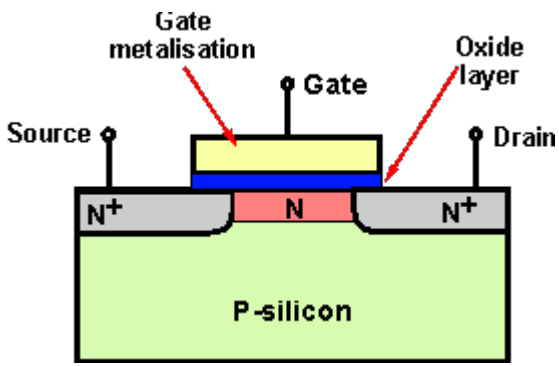

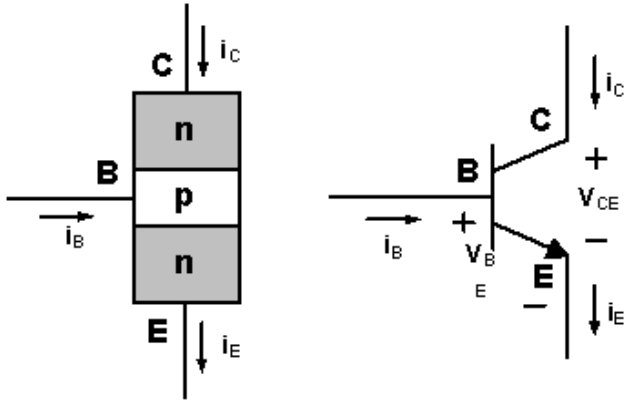

Regions of operation:

Exercise 3

- Large signal operation (DC operating point)

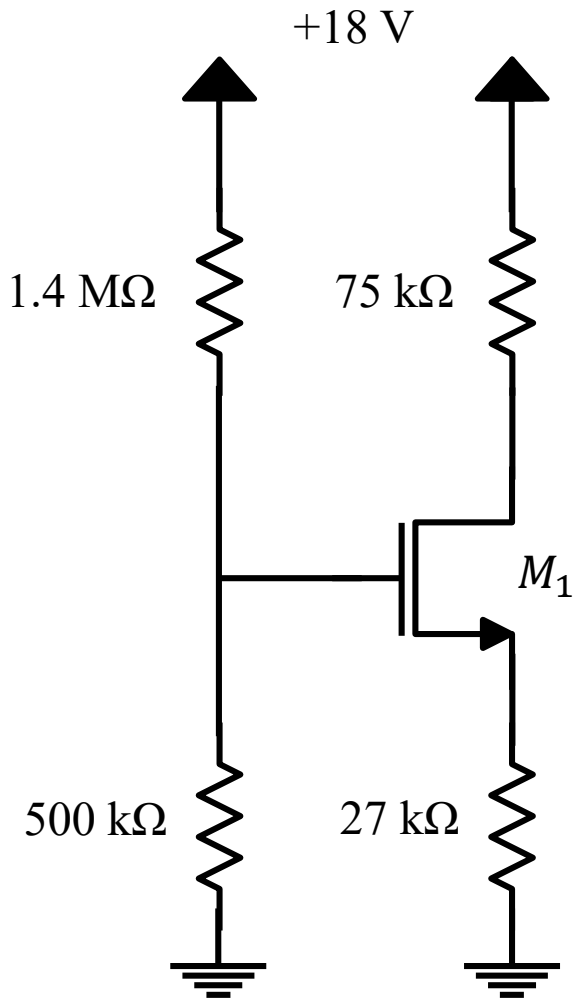

PARAMETER	VALUE	UNIT
W	10	μm
L	1	μm
μ_n	450	cm²/(V·s)
V_0	0.7	V

- **Assume in saturation**
- Solve for the drain current
- Check the assumption
- **If not in saturation, assume in linear region**
- Solve for the drain current
- Check the assumption
- If not in linear region, M1 is cut-off

Exercise 3

- Generate small signal model @ V_{in} = 1V

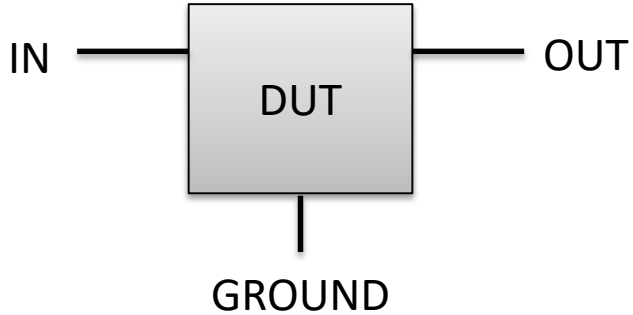

I_{in} vs. V_{in}

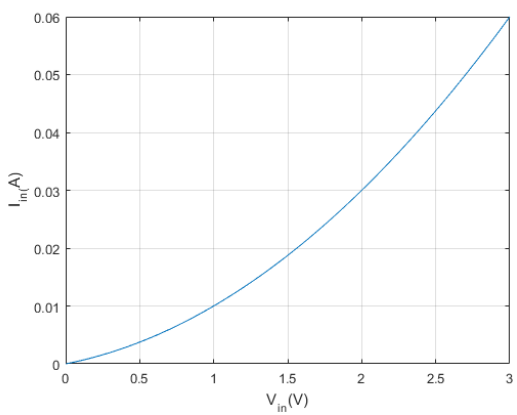

$$I = 0.005V^2 + 0.005V$$

I_{out} vs. V_{in}

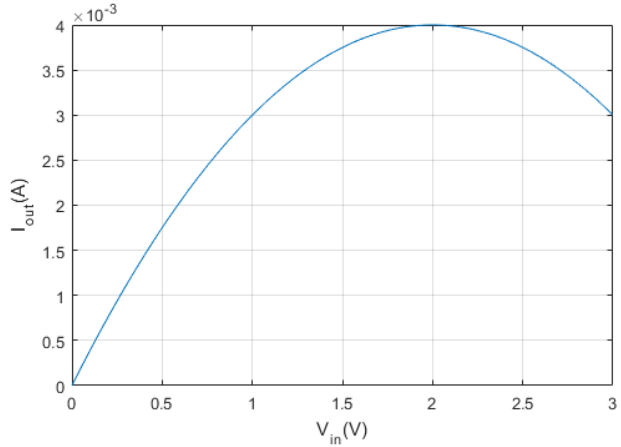

$$I = 0.001V^2 + 0.004V$$

I_{out} vs. V_{out}

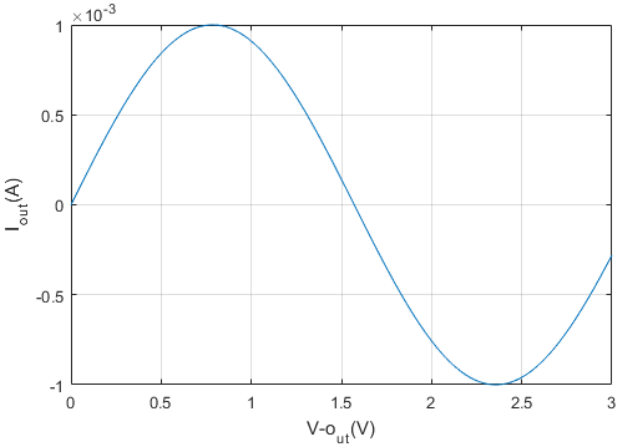

$$I = 0.001sin(2V)$$

Exercise 4

- Exercise 4
  - Multi-stage amplifier analysis
    - Inspection analysis
    - Miller effect
    - Mid-band gain
    - High corner frequency (OCTC)
    - Low corner frequency (SCTC)
    - Small-signal limitation and output swing

Exercise 4

4. For the amplifier in Figure PS10.3, assume that M_1 has the properties listed in Table PS10.2, and that Q_1 has the properties listed in Table PS10.1. Find $A_v(\frac{v_{out}}{v_s})$, R_{in}, R_{out}, f_L, and f_H.

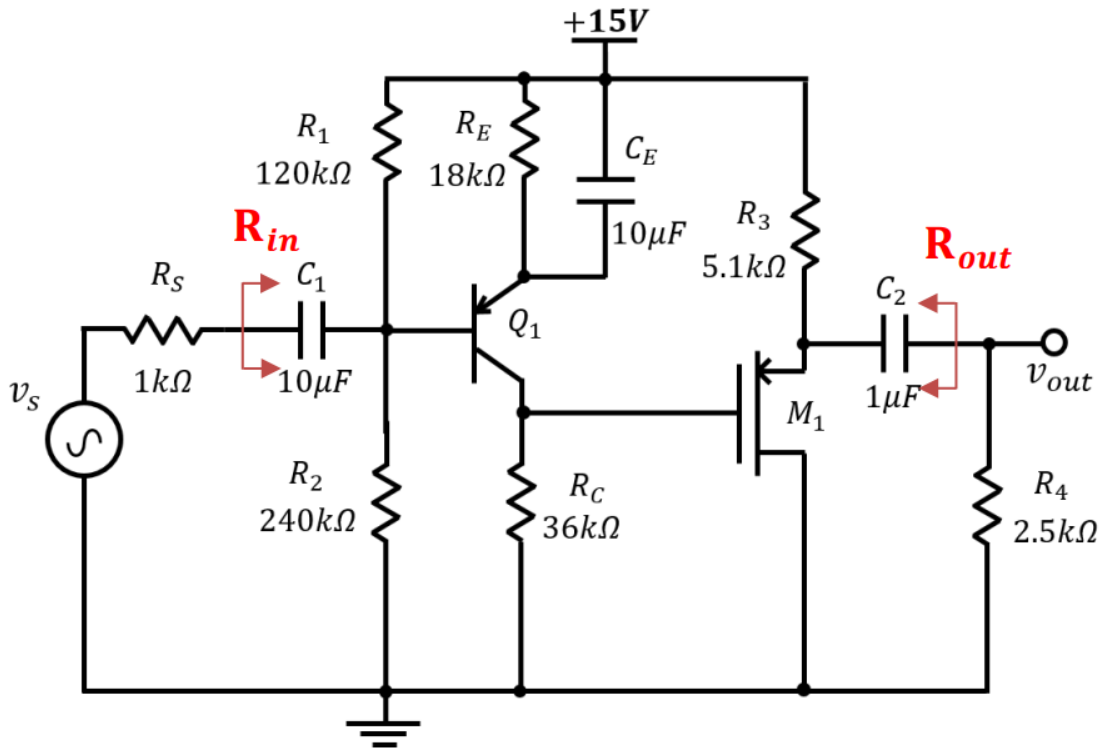

Figure PS10.3

Exercise 4

4. For the amplifier in Figure PS10.3, assume that M_1 has the properties listed in Table PS10.2, and that Q_1 has the properties listed in Table PS10.1. Find $A_v(\frac{v_{out}}{v_s})$, R_{in}, R_{out}, f_L, and f_H.

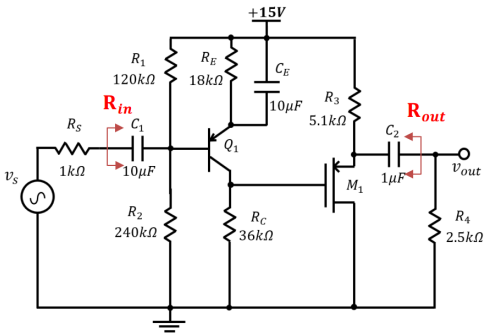

Figure PS10.3

Exercise 5

- Find $A_{v,d}$,$A_{v,c}$,and ***CMRR***

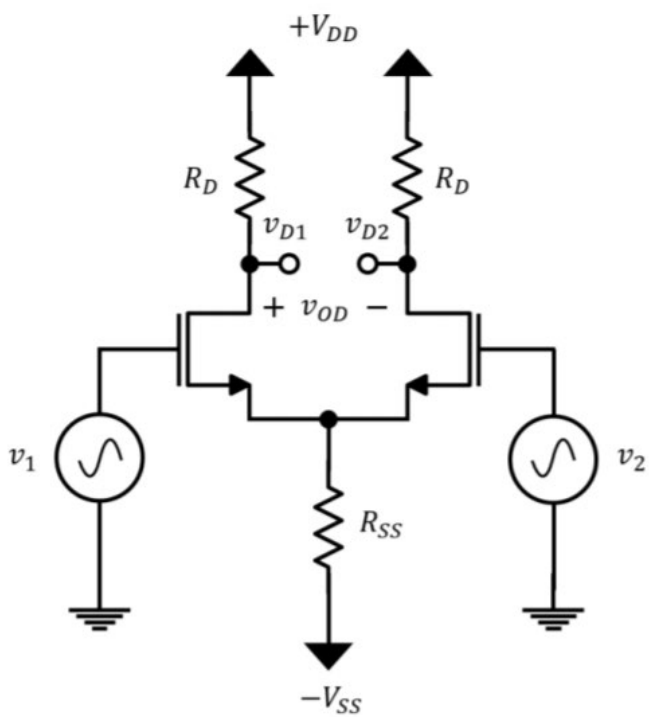

Figure PS11.1

Exercise 5

- Find $A_{v,d}$,$A_{v,c}$,and ***CMRR***

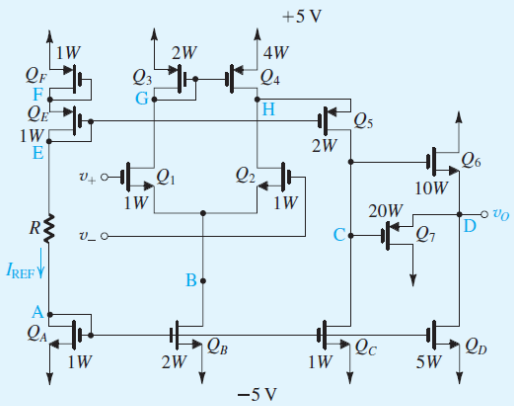

Figure P9.128

Exercise 5

- Find $A_{v,d}$,$A_{v,c}$,and ***CMRR***

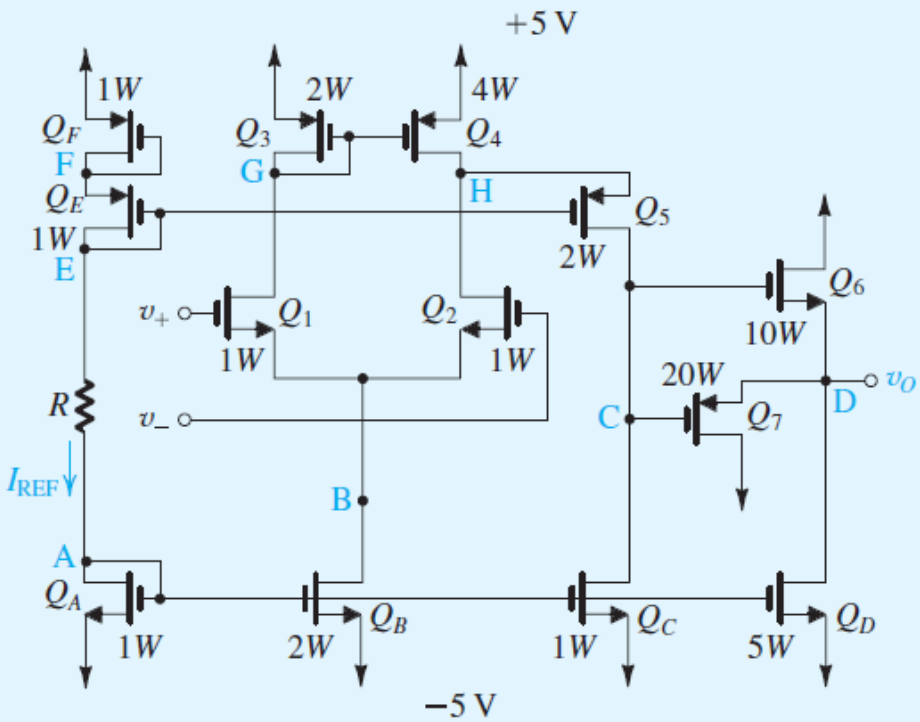

Figure P9.128

Digital circuit overview

- Digital circuit component
  - Inverter
  - Latch
  - Flip-flop
  - Pass-gate
  - …

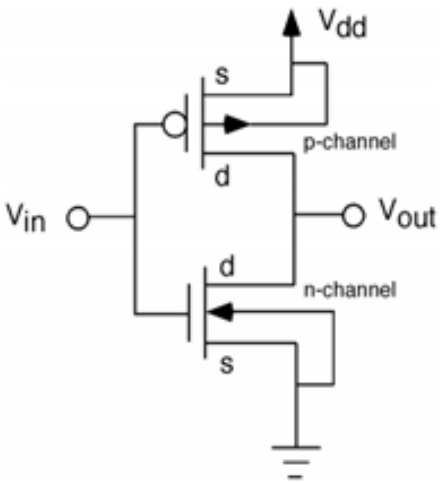

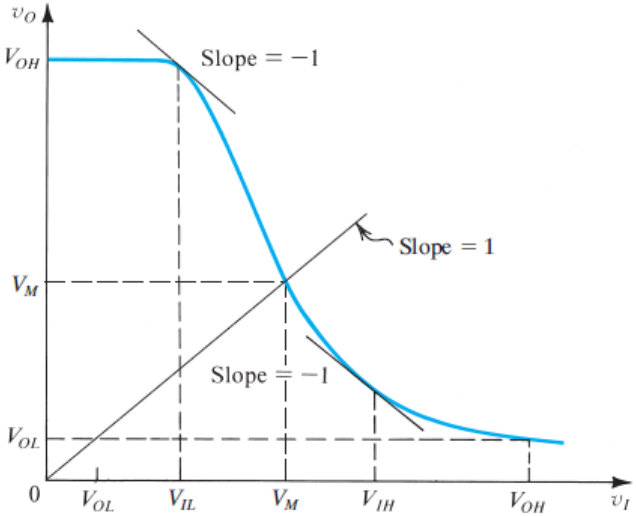

Digital circuit overview

- Ring Oscillator

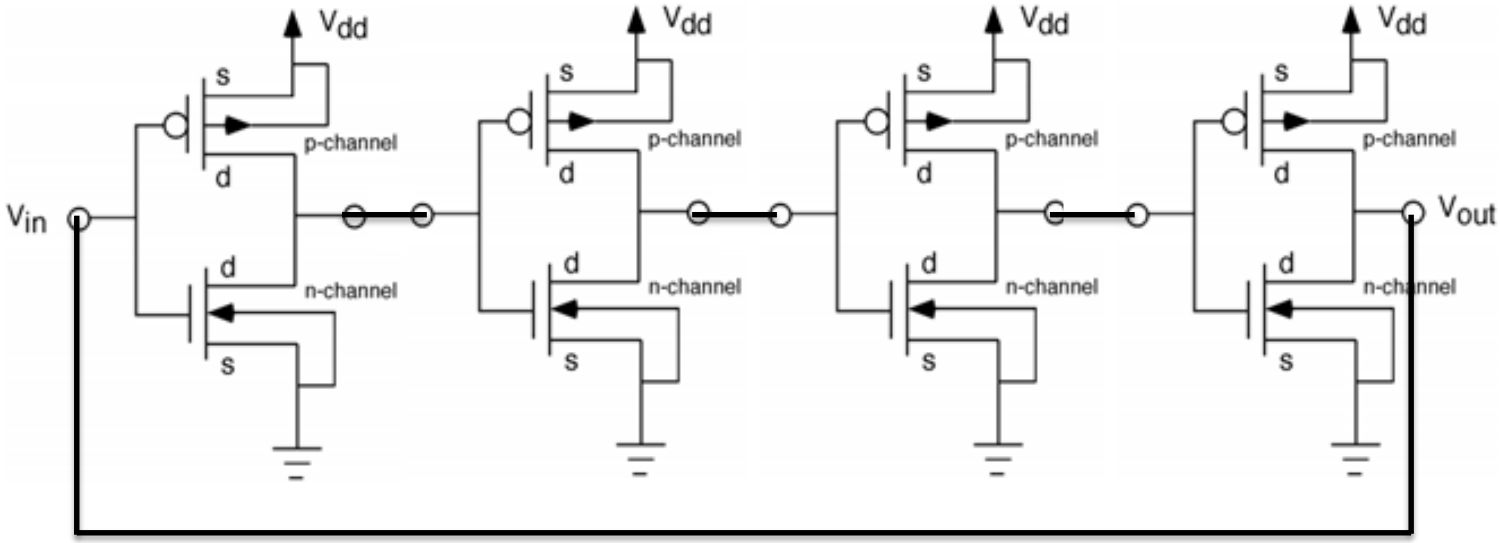

Digital circuit overview

- CMOS logic