EE 105 Discussion Welcome!

K. Peleaux & Qianyi Xie

Today

- Exercise 1: S&S 2.93
- Exercise 2
- Exercise 3
- Exercise 4

S&S 2.93

D **2.93 Derive the transfer function of the circuit in Fig. P2.93 (for an ideal op amp) and show that it can be written in the form

$$\frac{V_o}{V_i} = \frac{-R_2/R_1}{[1+(\omega_1/j\omega)][1+j(\omega/\omega_2)]}$$

where $\omega_1 = 1/C_1R_1$ and $\omega_2 = 1/C_2R_2$. Assuming that the circuit is designed such that $\omega_2 \gg \omega_1$, find approximate expressions for the transfer function in the following frequency regions:

(a) $\omega \ll \omega_1$
(b) $\omega_1 \ll \omega \ll \omega_2$
(c) $\omega \gg \omega_2$

Use these approximations to sketch a Bode plot for the magnitude response. Observe that the circuit performs as an amplifier whose gain rolls off at the low-frequency end in the manner of a high-pass STC network, and at the high-frequency end in the manner of a low-pass STC network. Design the circuit to provide a gain of 40 dB in the "middle-frequency range," a low-frequency 3-dB point at 200 Hz, a high-frequency 3-dB point at 200 kHz, and an input resistance (at $\omega \gg \omega_1$) of 2 kΩ.

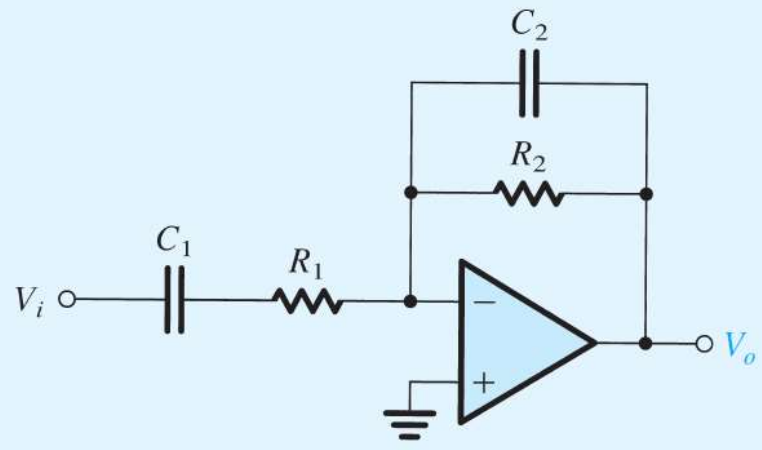

Figure P2.93

S&S 2.93

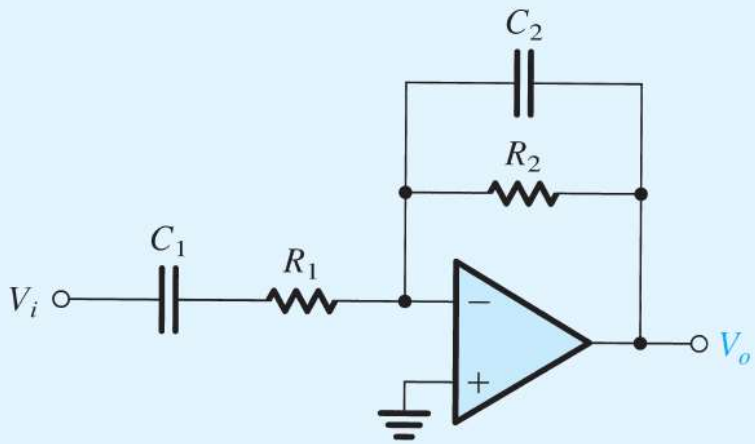

Figure P2.93

Use these approximations to sketch a Bode plot for the magnitude response. Observe that the circuit performs as an amplifier whose gain rolls off at the low-frequency end in the manner of a high-pass STC network, and at the high-frequency end in the manner of a low-pass STC network. Design the circuit to provide a gain of 40 dB in the "middle-frequency range," a low-frequency 3-dB point at 200 Hz, a high-frequency 3-dB point at 200 kHz, and an input resistance (at $\omega \gg \omega_1$) of 2 kΩ.

Within a) $\omega \ll \omega_1 \ll \omega_2$

$$\frac{V_o}{V_i} = \frac{-R_2/R_1}{[1+(\omega_1/j\omega)][1+j(\omega/\omega_2)]}$$

Pole

$$\Rightarrow -\frac{R_2}{R_1}\cdot\frac{1}{1+\frac{\omega_1}{j\omega}} = -\frac{R_2}{R_1}\cdot\frac{j\omega}{\omega_1+j\omega}$$

$$= -\frac{R_2}{R_1}\cdot\frac{j\omega}{1+\frac{j\omega}{\omega_1}}\cdot\frac{1}{\omega_1}$$

ω_p ω_z zero @ "0"

$$\frac{1+\frac{j\omega}{\omega_z}}{1+\frac{j\omega}{\omega_p}}$$

$j\omega$ instead of $\boxed{1+\frac{j\omega}{\omega_z}}$

$$= -\frac{R_2}{R_1}\cdot\boxed{\frac{j\omega}{\omega_1}} \approx 0$$

$$\Rightarrow \boxed{\frac{R_2}{R_1}\cdot\frac{\omega}{\omega_1}}$$

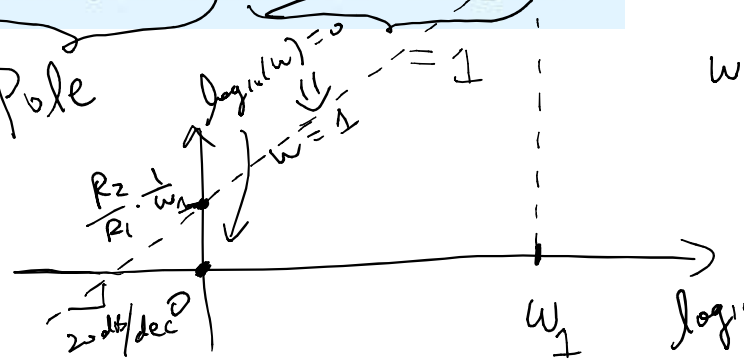

S&S 2.93

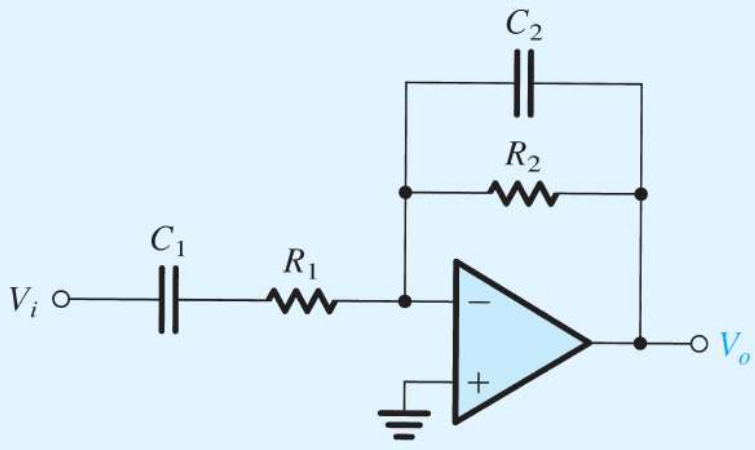

Figure P2.93

Use these approximations to sketch a Bode plot for the magnitude response. Observe that the circuit performs as an amplifier whose gain rolls off at the low-frequency end in the manner of a high-pass STC network, and at the high-frequency end in the manner of a low-pass STC network. Design the circuit to provide a gain of 40 dB in the "middle-frequency range," a low-frequency 3-dB point at 200 Hz, a high-frequency 3-dB point at 200 kHz, and an input resistance (at $\omega \gg \omega_1$) of 2 kΩ.

$$\boxed{-\frac{R_2}{R_1}\cdot\frac{1}{\omega_1}\cdot\frac{j\omega}{\left(1+\frac{j\omega}{\omega_1}\right)\left(1+\frac{j\omega}{\omega_2}\right)}}$$ General Form

within b) $\Rightarrow \omega_1 \ll \omega \ll \omega_2$

$$-\frac{R_2}{R_1}\cdot\frac{1}{\omega_1}\cdot\frac{j\omega}{\frac{j\omega}{\omega_1}\times 1}$$

$$= -\frac{R_2}{R_1}\cdot\left(\frac{j\omega}{\omega_1}\right)\Big/\left(\frac{j\omega}{\omega_1}\right)$$

$$= -\frac{R_2}{R_1}$$

Flat

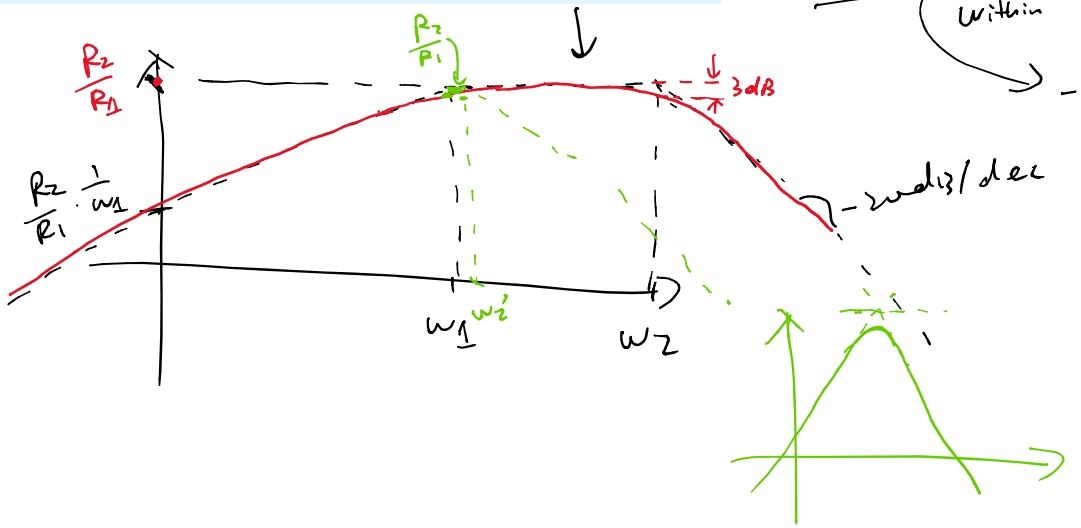

Exercise 2

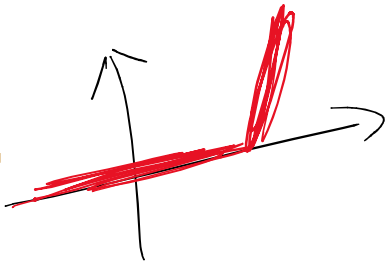

Assume ideal diode model

The waveform of the input voltage v_S to the circuit below is a triangle wave with a peak voltage of $1V$ and a period of T. Sketch the waveform of the output voltage v_O.

Pure R path

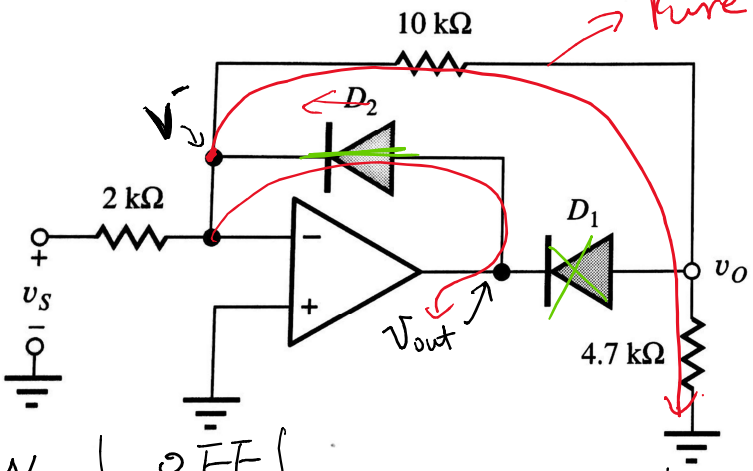

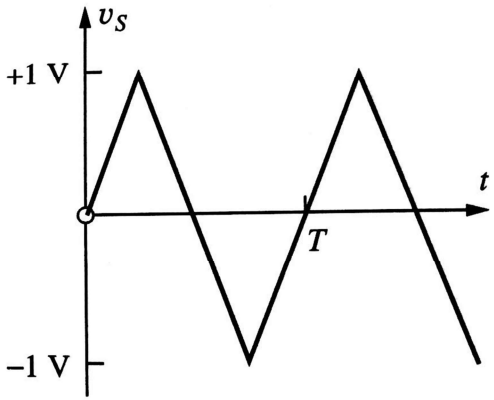

	ON	OFF
D_1	v_{out} v_o	v_{out} v_o
D_2	v_{out} v^-	v_{out} v^-

D_1 \ D_2	ON	OFF
ON		
OFF		

Exercise 2

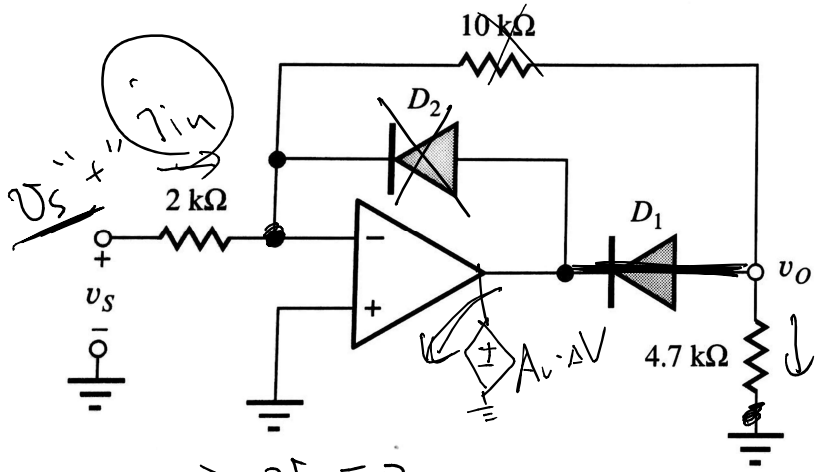

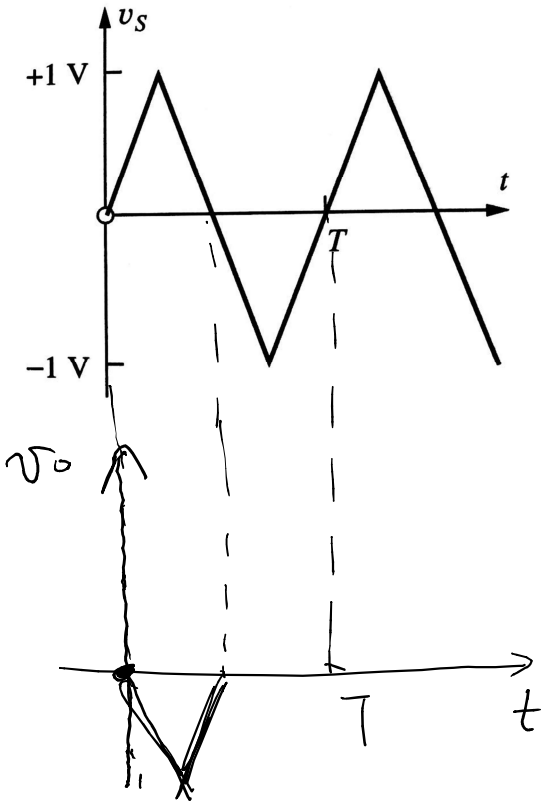

① $v_S = 0 \Rightarrow v_O = 0$

② $v_S > 0$

Exercise 2

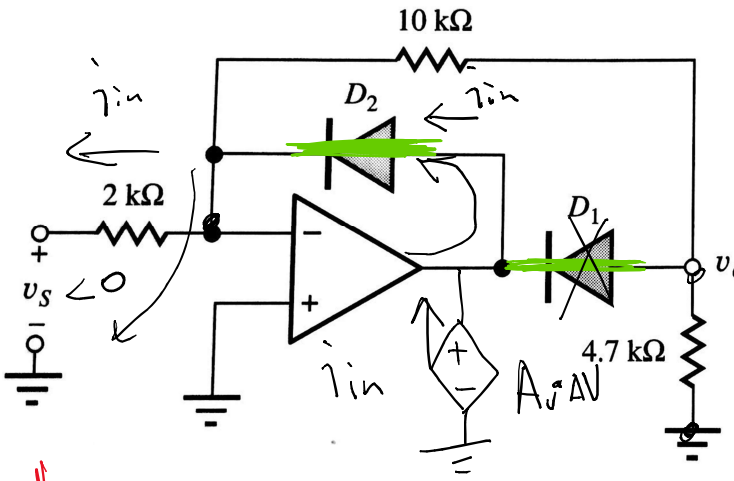
10 kΩ
D_2
D_1
2 kΩ
v_S
v_O
4.7 kΩ
i_{in}
$A_v \Delta V$
$v_O = 0$
$v_S < 0$

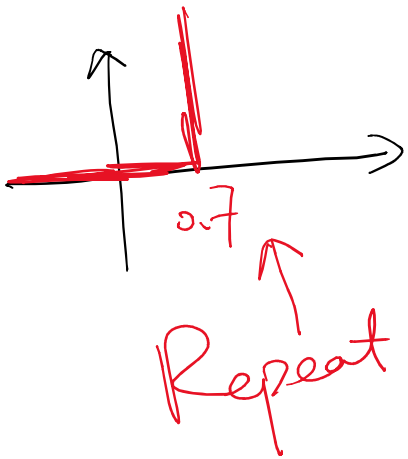
0.7
Repeat

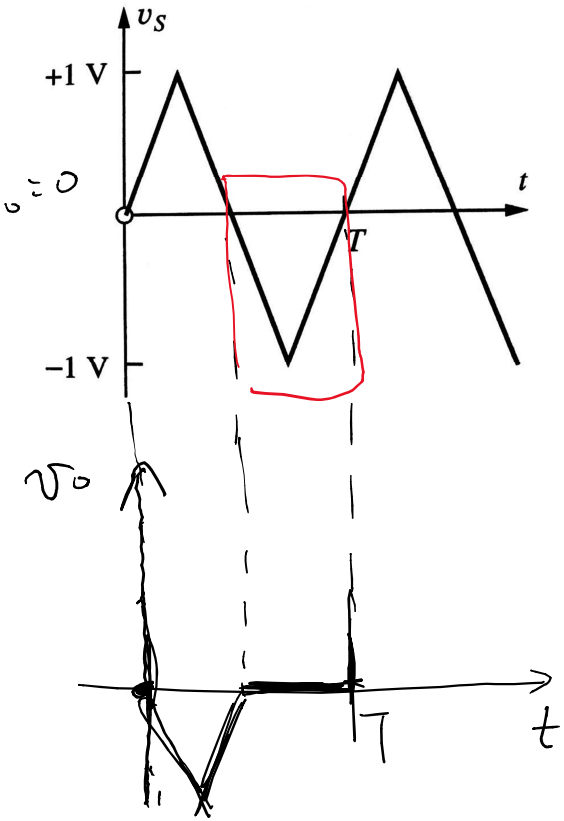
v_S
+1 V
−1 V
t
T
v_O

Exercise 3

$K_p = \mu_n C_{ox} \frac{W}{L}$ $K_p' = \mu_n C_{ox}$?

The output characteristics for a PMOS transistor are given. What are the values of K_p' and V_{TP} for this transistor? Is this an enhancement-mode or depletion-mode transistor? What is the value of W/L if $K_p = 10\mu A/V^2$?

Saturation

Linear

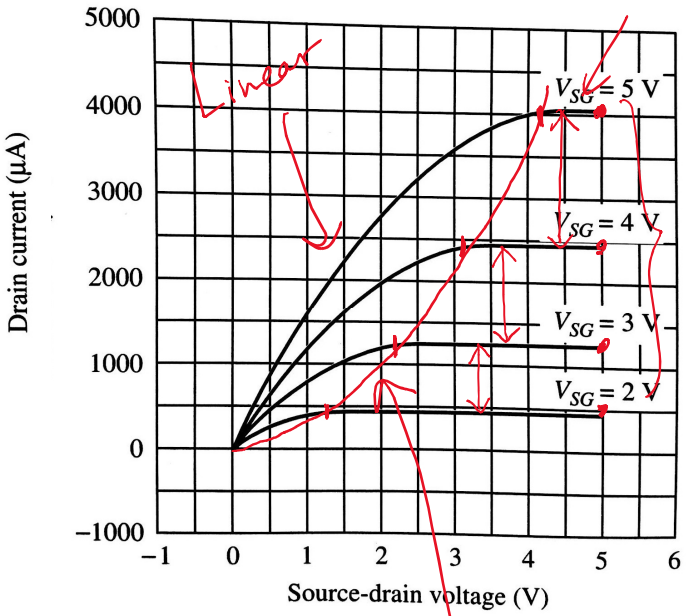

Linear: $I_{SD} = \underbrace{\mu_p C_{ox} \frac{W}{L}}_{K_p} \left[(V_{SG} - V_{TP}) V_{SD} - \frac{V_{SD}^2}{2} \right]$

For $V_{SG} > 0$ & $V_{SD} \le V_{SG} - V_{TP}$

Saturation: $I_{SD} = \frac{\mu_p C_{ox} \frac{W}{L}}{2} (V_{SG} - V_{TP})^2$

For $V_{SG} > 0$ & $V_{SD} \geq V_{SG} - V_{TP}$

$$\begin{cases} I_1 = K_p \cdot (V_1 - V_{TP})^2 \\ I_2 = K_p \cdot (V_2 - V_{TP})^2 \end{cases} \Rightarrow V_{TP} \ \& \ K_p'$$

	Enhancement	Depletion
PMOS:	$V_T < 0$	$V_T > 0$
NMOS?	$V_T > 0$	$V_T < 0$

! $\mu_p C_{ox} \frac{W}{L} \cdot V_{SD}^2$

Exercise 3

The output characteristics for a PMOS transistor are given. What are the values of K_p and V_{TP} for this transistor? Is this an enhancement-mode or depletion-mode transistor? What is the value of W/L?

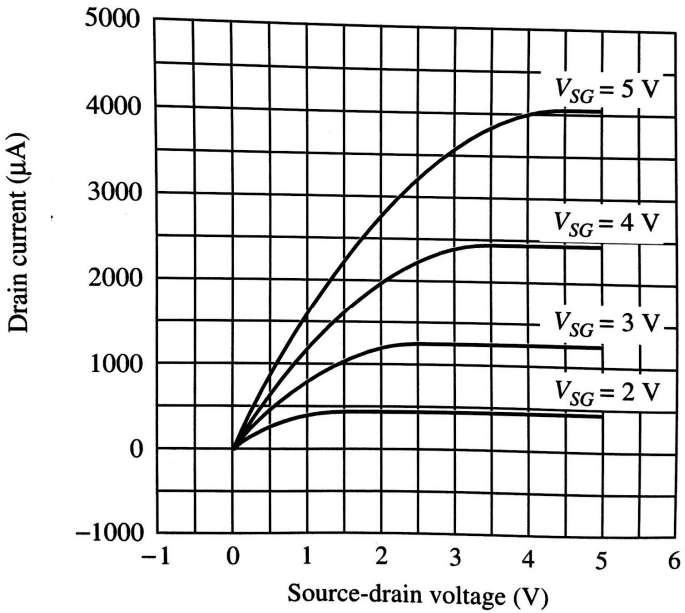

Exercise 4

Figure below presents an NMOS transistor cross-section and its top-view. Derive the expression for the device current when operating in the saturation region as a function of μ_n, C_{ox}, V_{GS}, V_{DS} and V_{th}. Assume $\lambda = 0$.

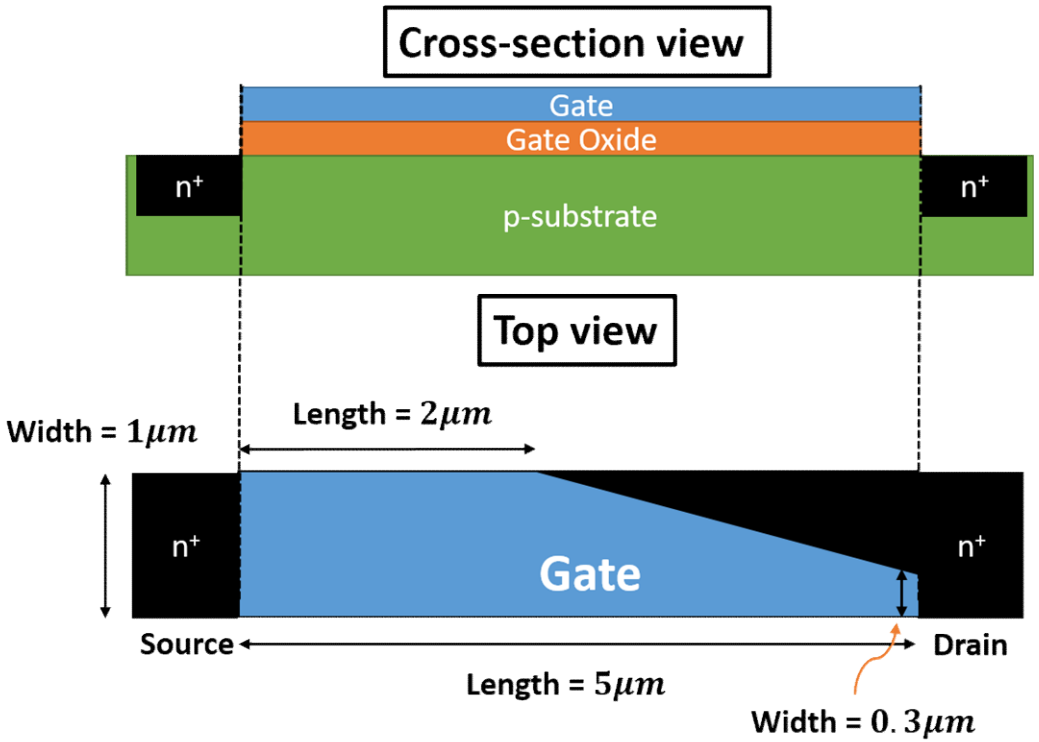

Exercise 4

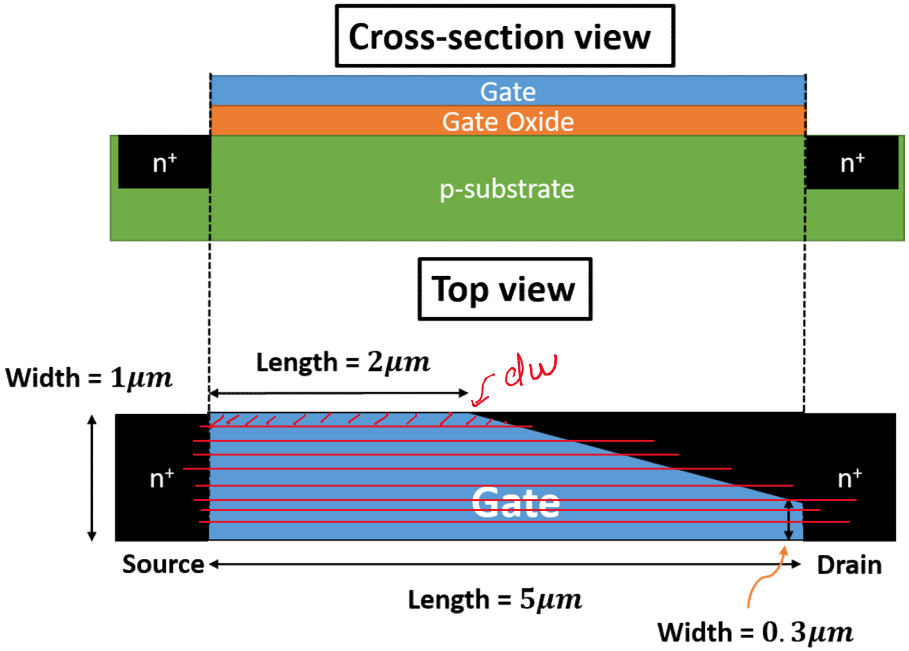

$$\boxed{\int_0^L I\,dx = \int_0^{v_{DS}} \mu_n C_{ox} \cdot \frac{W}{L} \cdot [v_{GS} - v_{TH} - v(x)] \cdot dv_{DS}}$$

$W = f(L)$

$L = f(W)$

① $$\int_0^{f(W)} I\,dx = \int_0^{v_{DS}} \mu_n C_{ox} \frac{dW}{L} [v_{GS} - v_{TH} - v(x)] \cdot dv_{DS}$$

② $$I_{tot} = \int_0^W I(w)dw$$

① ⇒ Solving for current within each segment w/ $W = dw$

② ⇒ Summing current within all segments w/ $W = dw$