EE 105 Discussion Welcome!

K. Peleaux & Qianyi Xie

Today

- Lab
- Non-ideal OpAmp
  - Gain-BW
  - Gain Error in Feedback
  - Two-pole System
  - Input Offset
  - Slew Rate

Lab

- Pre-Lab
  - Turn in Pre-Lab before the start of your lab session
  - Berkeley Time
- Lab report
  - Turn in lab report before the start of your next lab session
  - Berkeley Time

Non-Ideal OpAmp

- Finite Gain
- Finite Input Impedance
- Finite Output Impedance
- Input Offset Current
- Input Offset Voltage

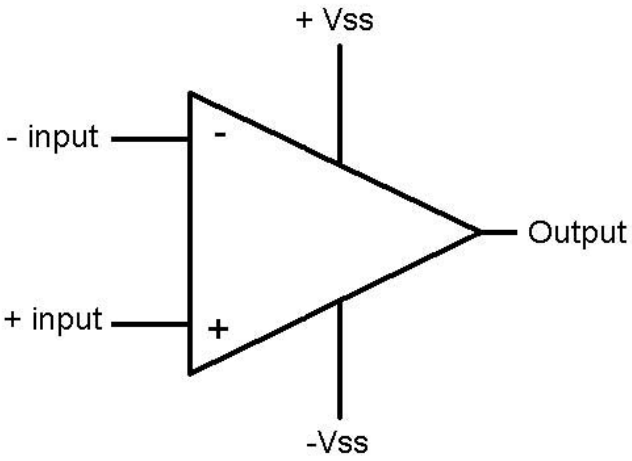

Non-Ideal OpAmp

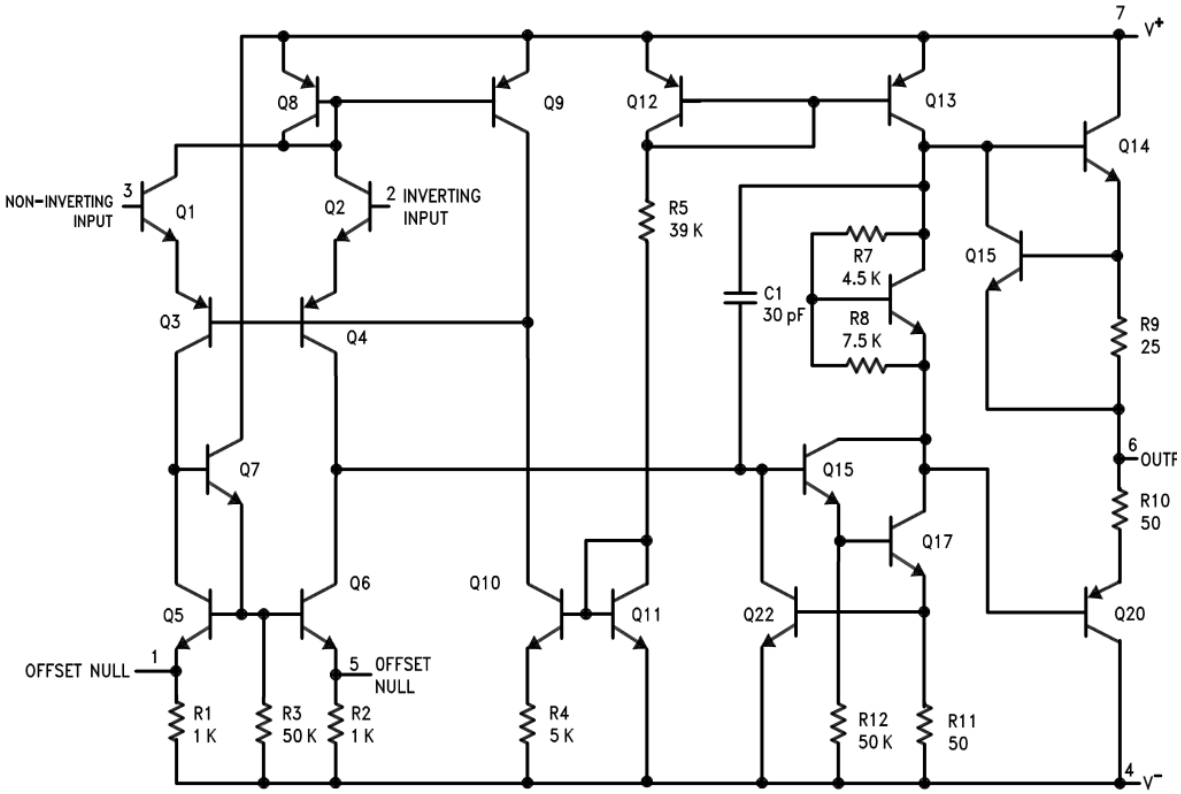

Gain-BW

- DC Gain
- 3dB Frequency
- Unity-Gain Frequency

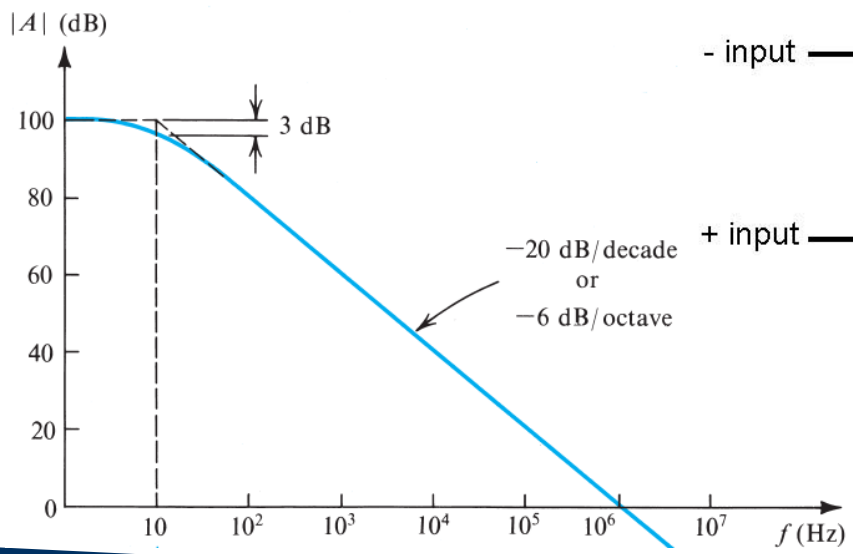

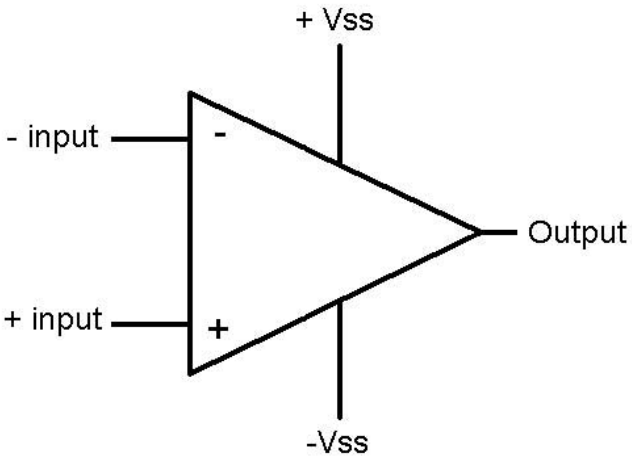

Gain Error in Feedback

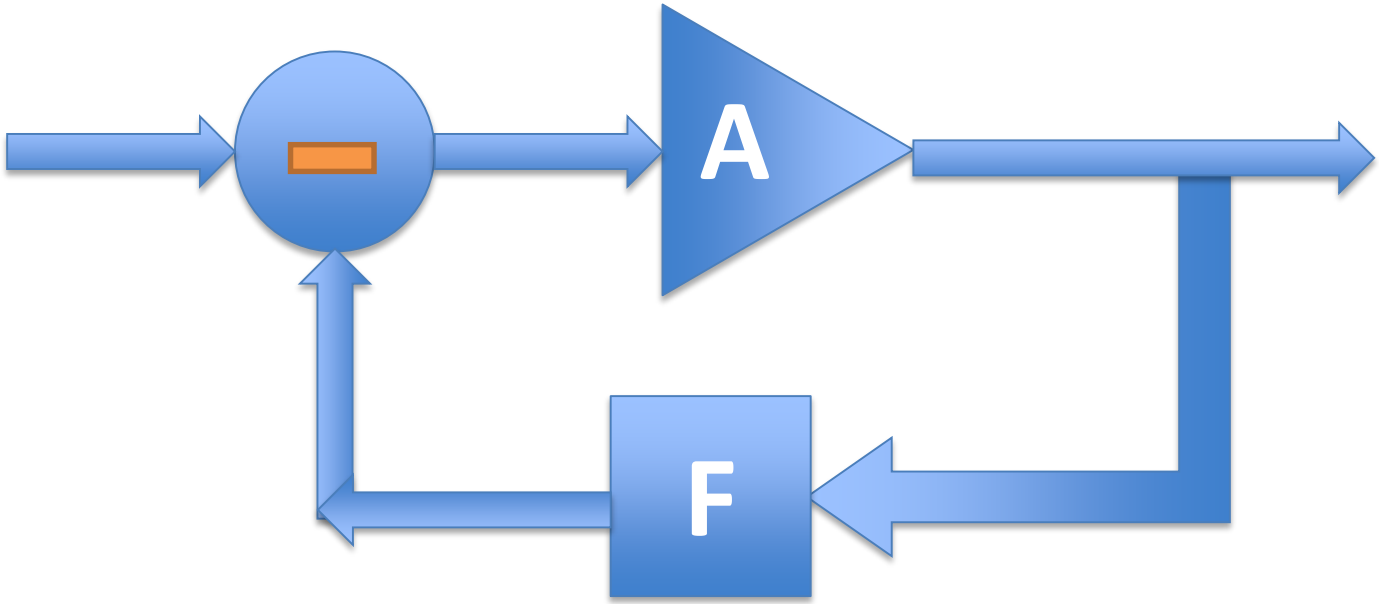

Two-pole System

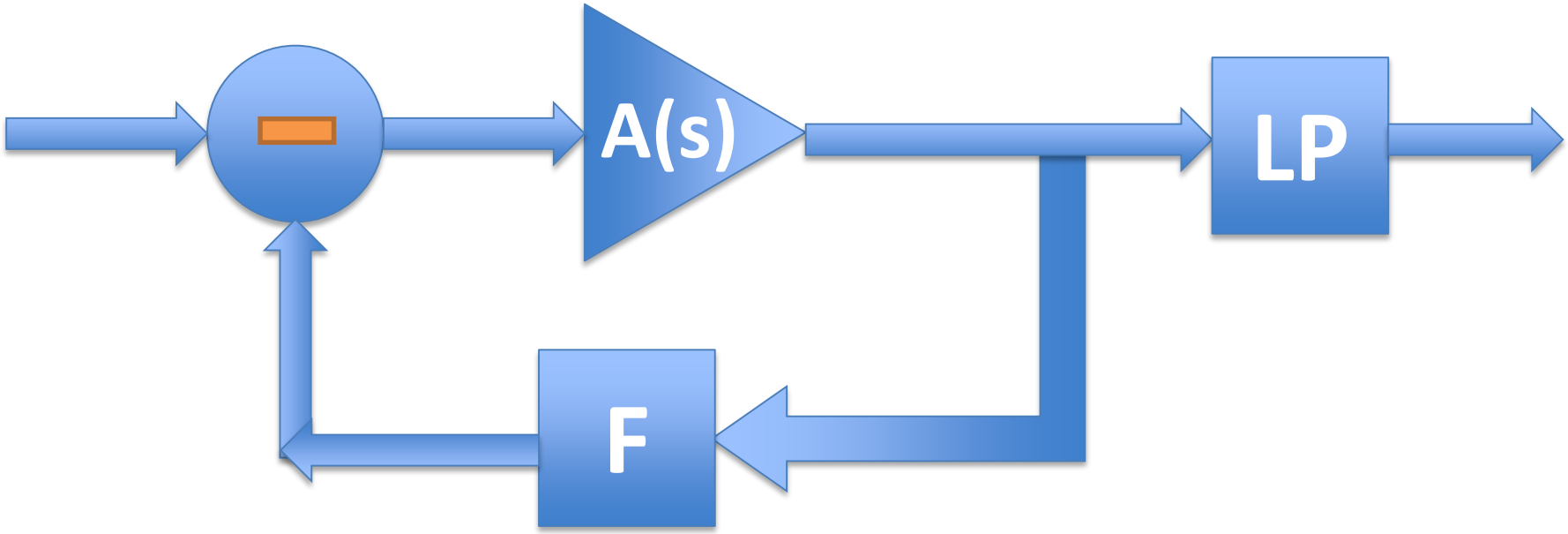

Two-pole System

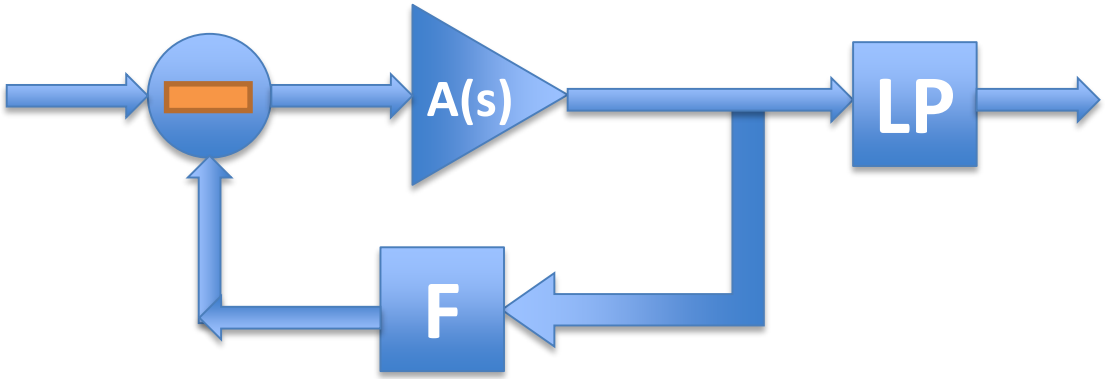

Two-pole System

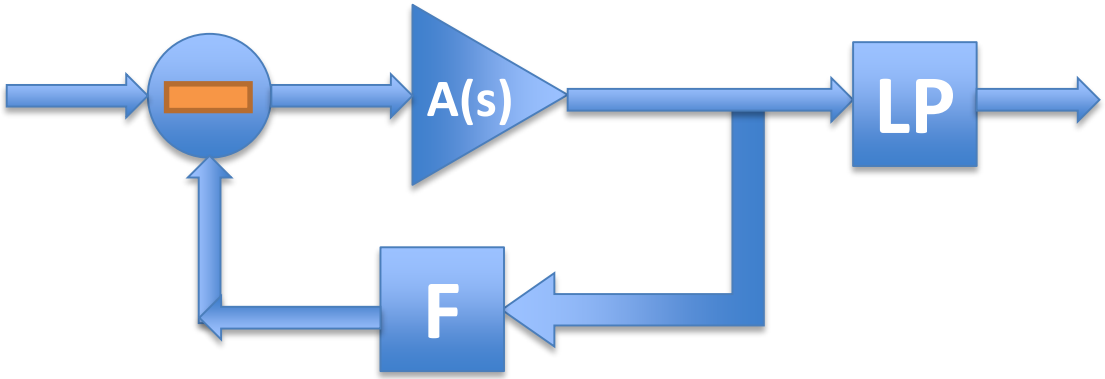

Input Offset

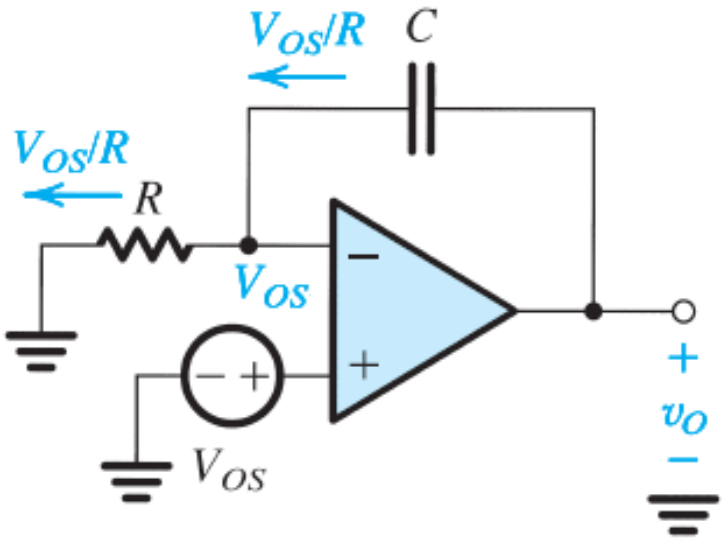

Determine the effect of V_{os} on v_o

Slew Rate

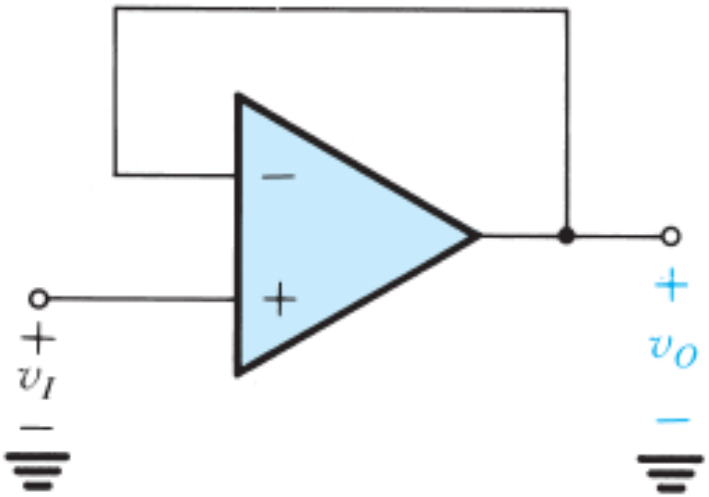

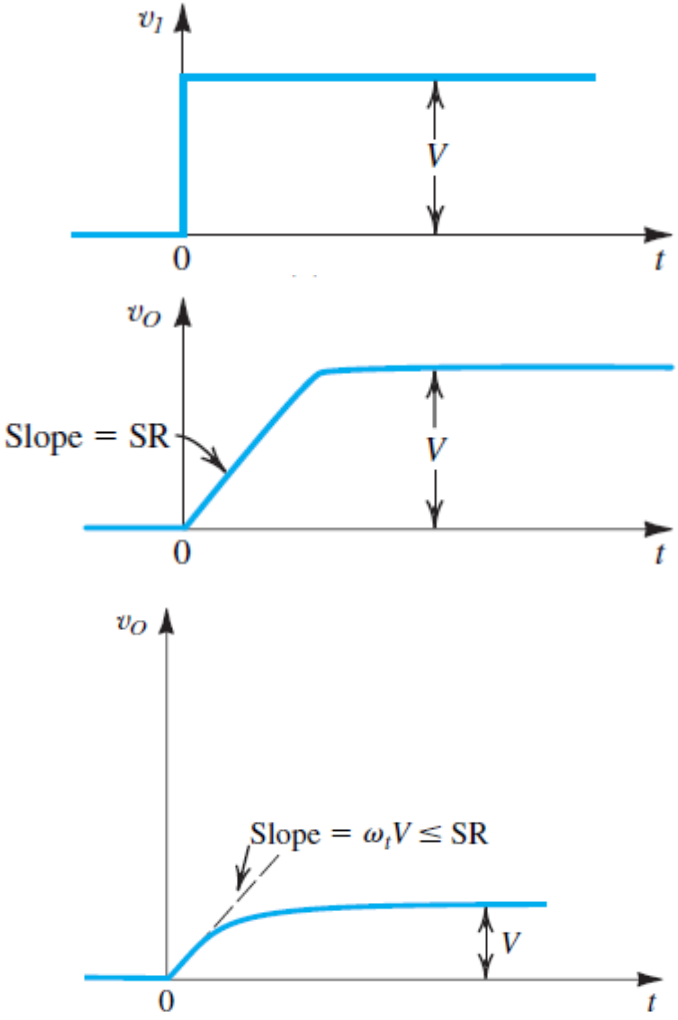

$$v_I = V \sin \omega t$$

$$\frac{dv_o}{dt} = \ ?$$