EE 105 | Discussion 13

Kieran Peleaux & Qianyi Xie

Discussion Outline

- Bandgap Reference
- Toward a High Gain

Bandgap Reference

- How to get '1V' on-chip?
  - AAA battery as power supply

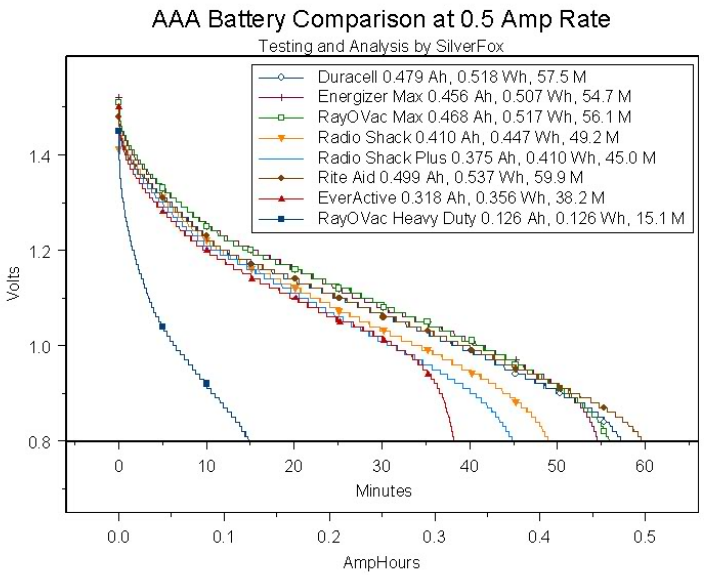

Bandgap Reference

- Supply-independent reference voltage

Bandgap Reference

- Supply/Temperature independent reference voltage

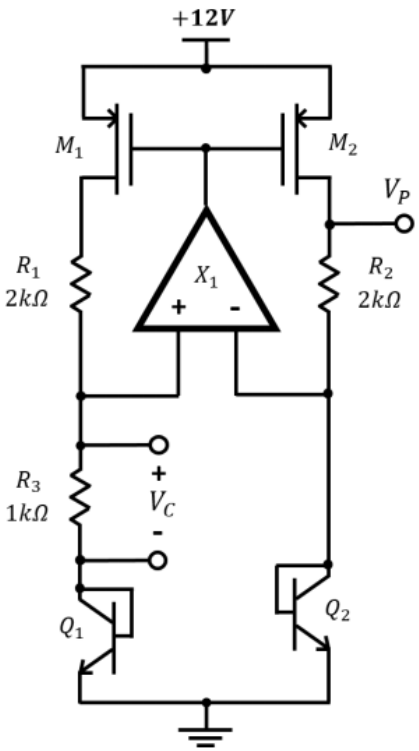

Figure PS10.5

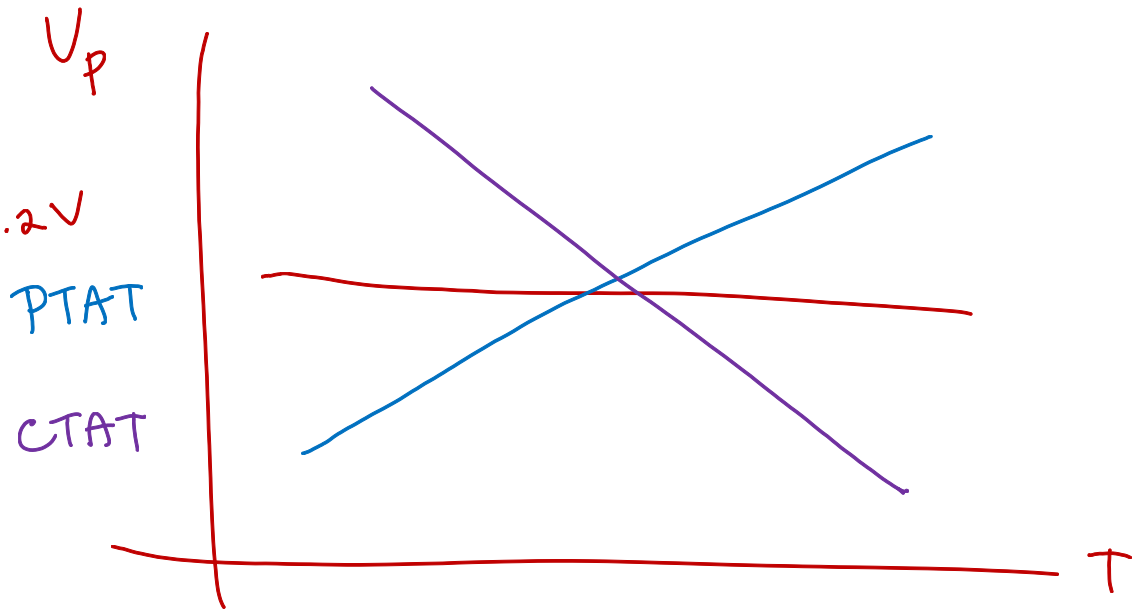

PTAT + CTAT = constant across T

Bandgap Reference

- Supply/Temperature independent reference voltage

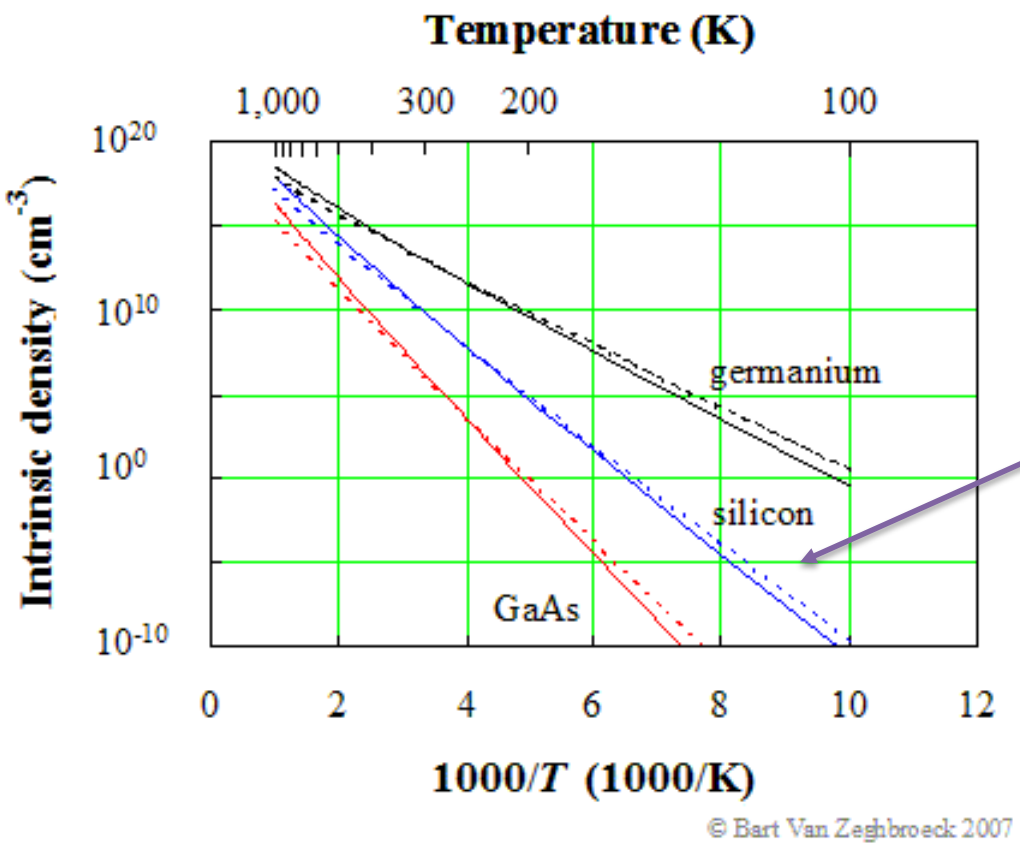

$$V_{bi} = \frac{kT}{q}\ln\left(\frac{N_A N_D}{n_i^2}\right)$$

Bandgap Reference

- Supply/Temperature independent reference voltage

$I_C = I_S e^{V_{be}/V_T}$ I_C const, $T\uparrow$, V_{be}

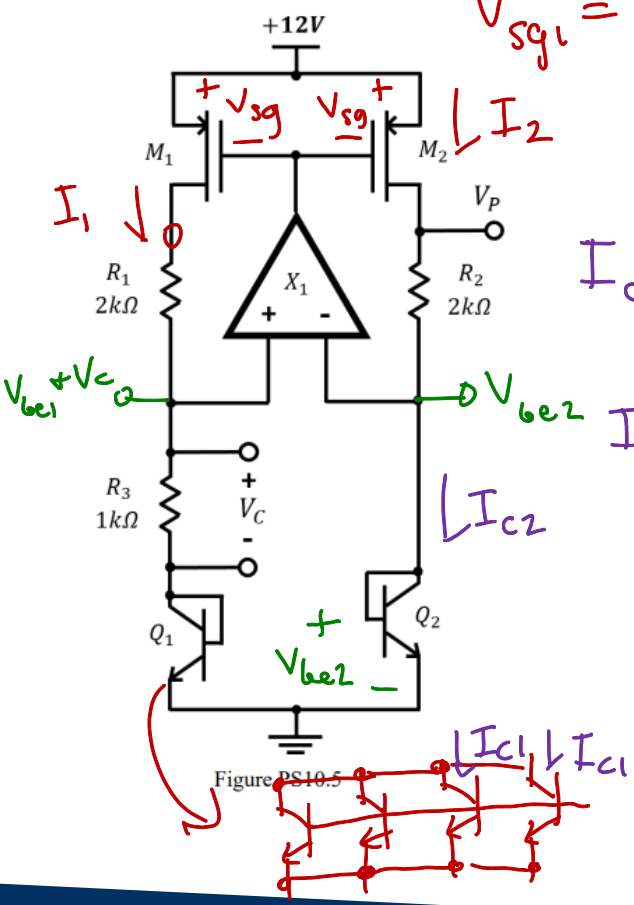

Figure PS10.5

$V_{sg1} = V_{sg2}$

$I_1 = I_2$

$I_C = I_S e^{V_{be}/V_T}$ kT/q

$I_{C1} = \frac{I_1}{4} = \frac{I_2}{4} = \frac{I_{C2}}{4}$

$I_{C1} = \cancel{I_S} e^{V_{be1}/V_T} = \frac{1}{4}\cancel{I_S} e^{V_{be2}/V_T}$

$v^+ = v^-$

$V_{be1} + V_C = V_{be2}$

$\ln(4) = \ln\left(e^{(V_{be2}-V_{be1})/V_T}\right)$

$\Delta V_{be} = V_C$ [PTAT]

$\ln(4) V_T = V_{be2} - V_{be1} = \Delta V_{be}$

$I_1 = I_2 = \frac{V_C}{R_3}$

$\Delta V_{be} = \ln(n)\frac{kT}{q}$ [PTAT]

$V_P = V_{be2} + I_2 R_2$

$V_P = \underbrace{V_{be2}}_{\text{CTAT}} + \underbrace{\Delta V_{be}\frac{R_2}{R_3}}_{\text{PTAT}}$

Toward a High Gain

- Need more gain than CS/CE provides

$A_o = g_m r_o$

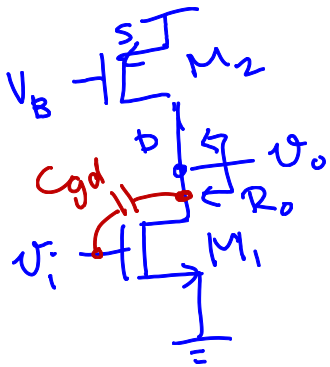

$A_v = -g_{m1} R_o = -g_m (r_{o1} // r_{o2})$

$A_v = -\frac{g_m r_o}{2}$

$C_{dom} = C_{gs1} + C_{gd1}\left(1 + \frac{g_m r_o}{2}\right)$

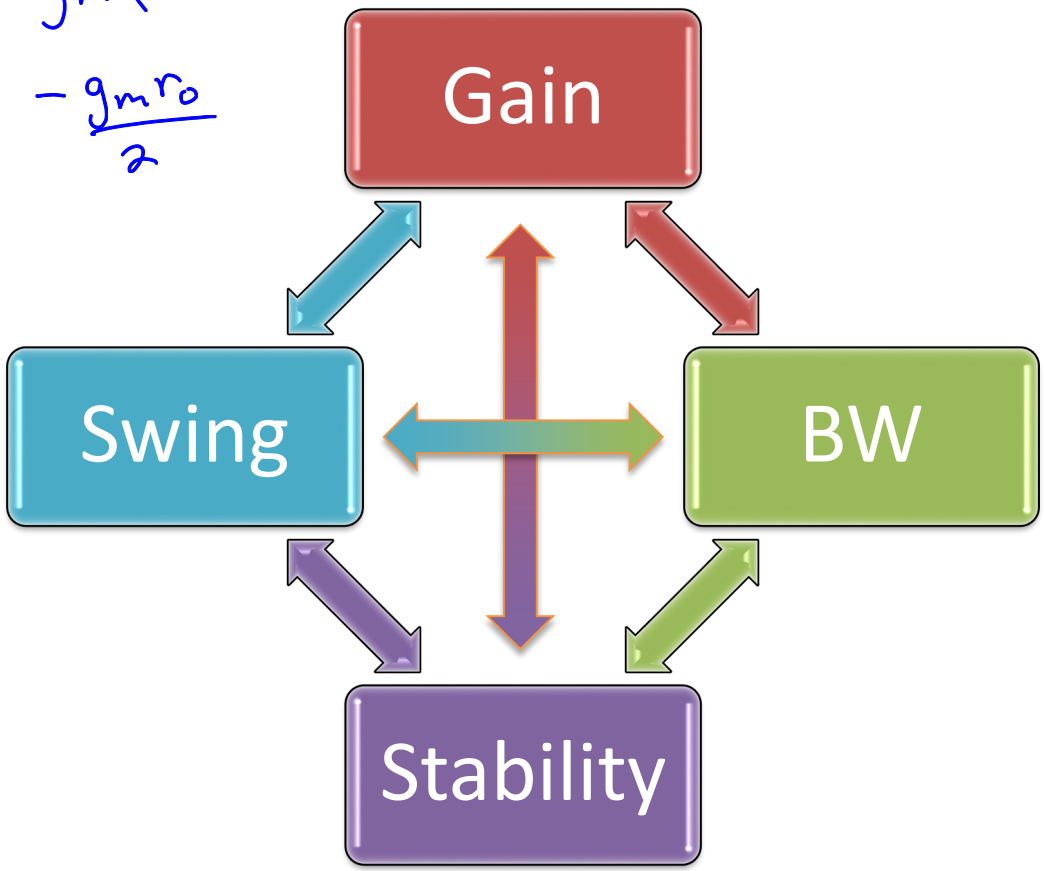

Multi-Stage Amplifier

$A_v = -(g_{m1} + g_{m3})(r_{o1} // r_{o3}) = -g_m r_o$ $\quad \frac{v_o}{v_i} = (g_m r_o)^2$

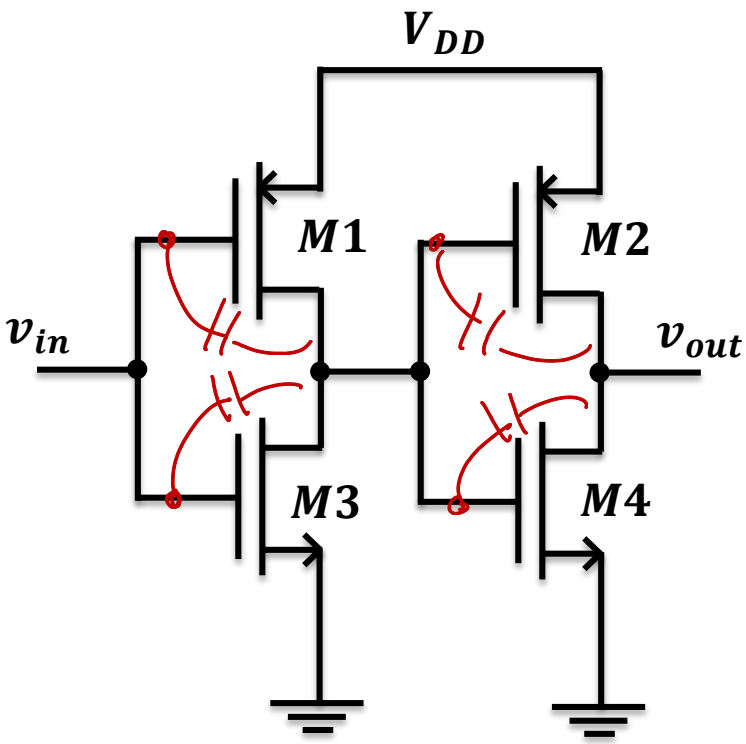

$C_{in} = C_{gs1} + C_{gs3} + (1 + g_m r_o)(C_{gd1} + C_{gd3})$

2-Stage CS w/ FB

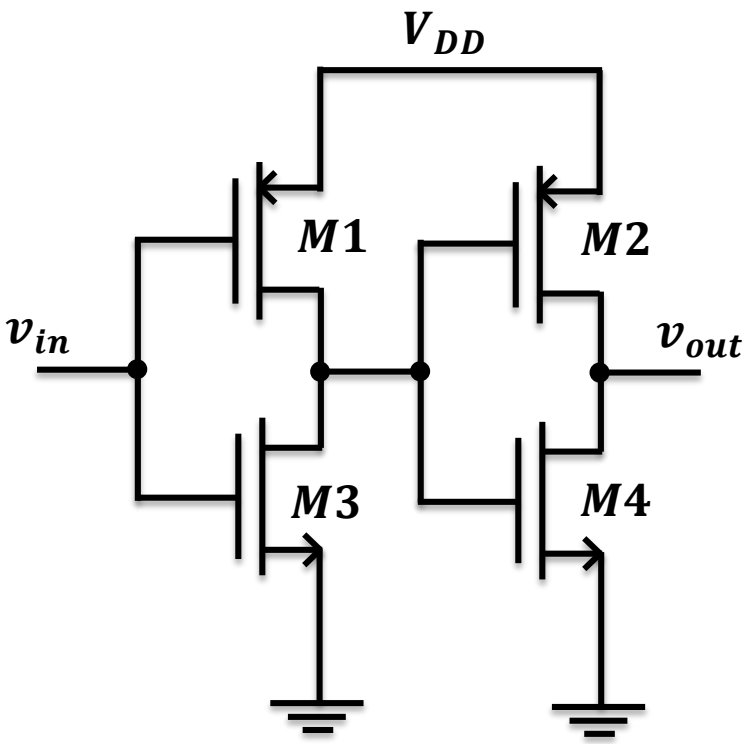

2-Stage CS w/ Miller Compensation

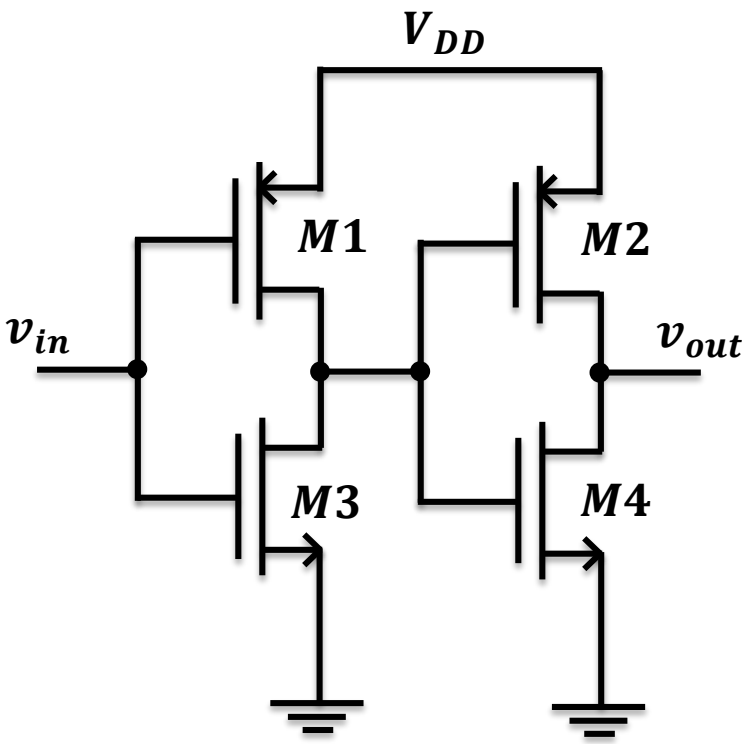

Cascode Amplifier

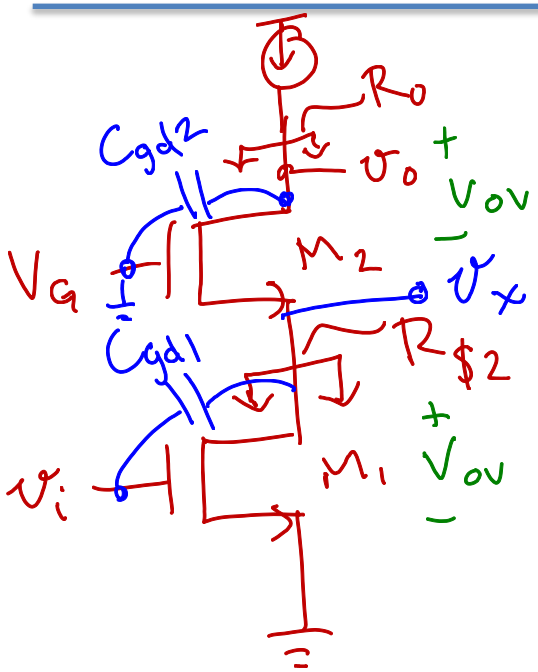

$$\frac{v_o}{v_i} = -g_{m1}\left[r_{o2}\left(1+\overbrace{g_{m2}R_{\$2}}^{g_m r_o \gg 1}\right)\right] \qquad R_{\$2} = r_{o1}$$

$$= -g_{m1} r_{o2}\, g_{m2} r_{o1} = -(g_m r_o)^2$$

$$|A_v| = g_m r_o = \frac{2\cancel{I_D}}{V_{ov}}\frac{V_A}{\lambda \cancel{I_D}}$$

Advantages: gain ↑↑

BW ↑

$$\frac{v_x}{v_i} = -g_{m1}\left[r_{o1} \parallel \frac{1}{g_{m2}}\right] \approx -1$$

Disadvantages: $V_{o,min} = 2V_{ov}$

$$C_{in} = C_{gs1} + C_{gd1}(1+1)$$

$$V_{DD} \geq 2V_{ov} + V_{o,pp}$$

$V_{DD} = 0.8^V$, $V_{o,pp} = 0.4^V$

$V_{ov,max} = ? = 200mV$

Cascode Amplifier

Cascode Amplifier

Differential Pairs

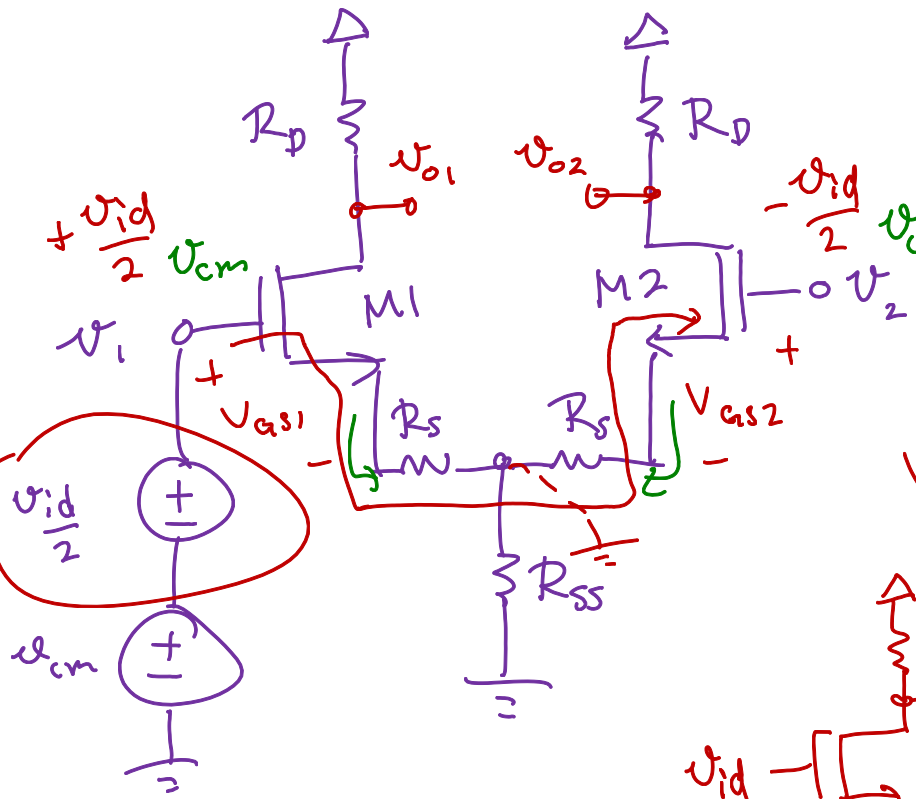

$v_1 - v_2$

$v_{od} = v_{o1} - v_{o2}$

$v_1 = v_{cm} + \frac{v_{id}}{2}$, $v_2 = v_{cm} - \frac{v_{id}}{2}$

$$\begin{bmatrix} v_{cm} = \frac{v_1 + v_2}{2} \\ v_{id} = (v_1 - v_2) \end{bmatrix}$$

$V_{GS1} = V_{GS2}$ $\quad \frac{v_{id}}{2} - V_{GS} + V_{GS} = -\frac{V_{id}}{2}$

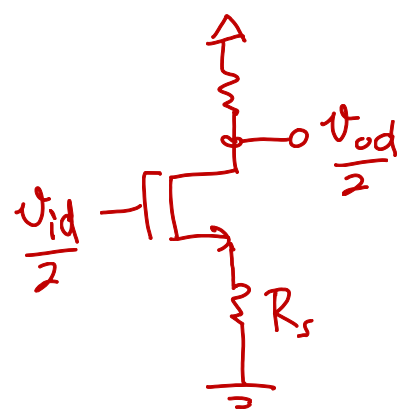

$A_{vdm} = \frac{v_{od}/2}{v_{id}/2} = \frac{v_{od}}{v_{id}}$

differential-mode ½ ckt.

Differential Pairs

Common-mode ½ ckt.

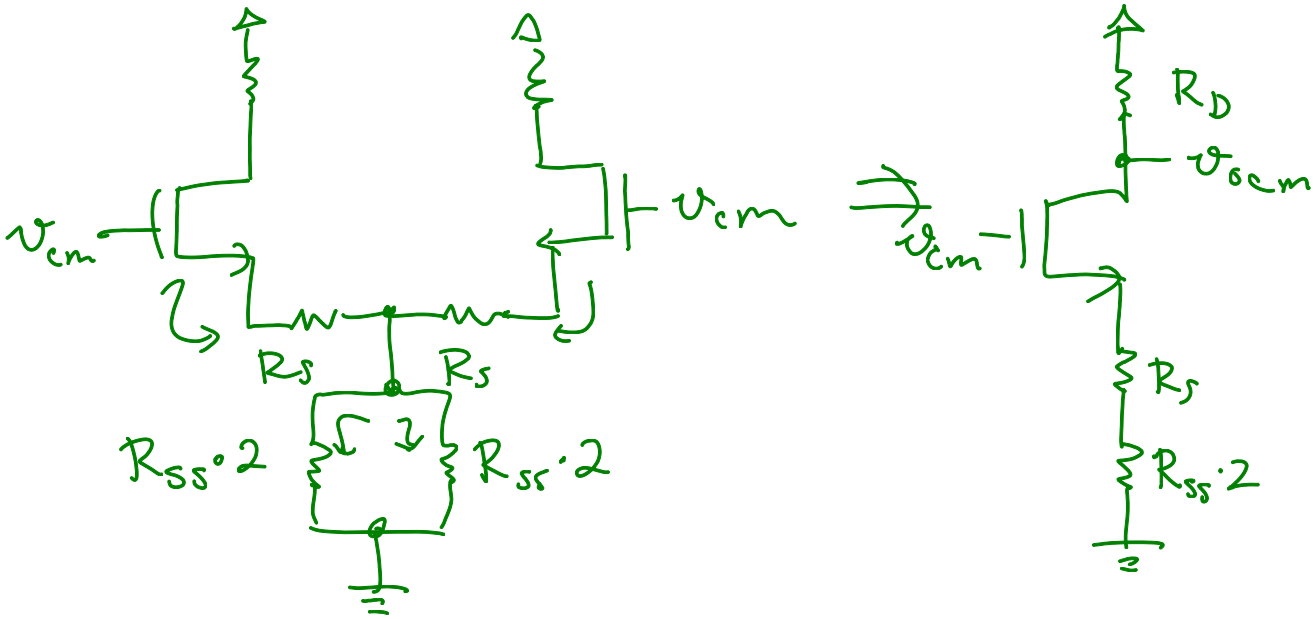

$$A_{cm} = \frac{v_{ocm}}{v_{icm}}$$

Differential Pairs

Frequency Compensation

Stage 2(?)

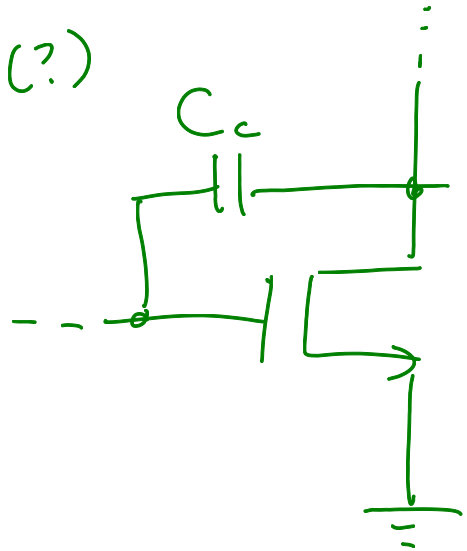

$$A_{v2} = -G_{m2} R_{D2}$$

$$C_{in2} = C_c (1 + G_{m2} R_{D2})$$

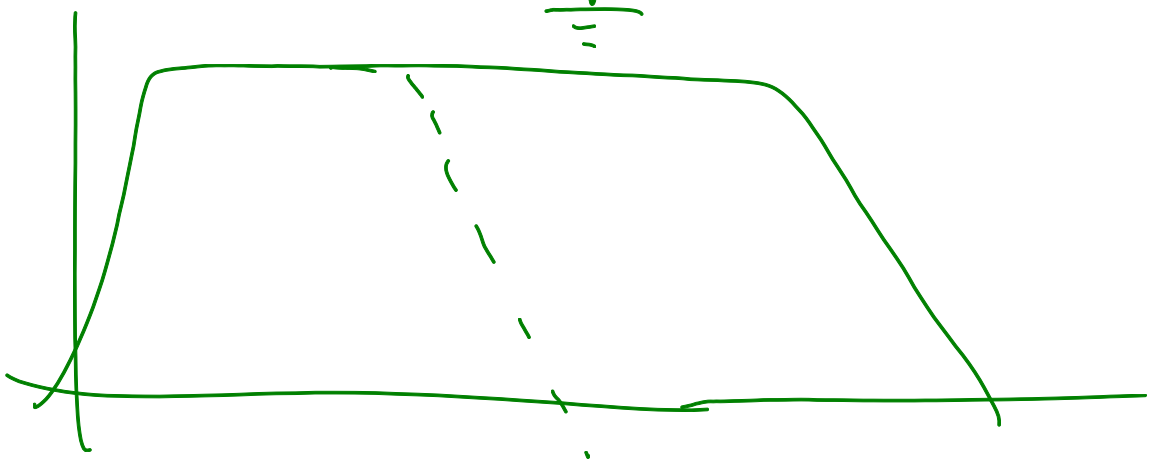

Frequency Compensation

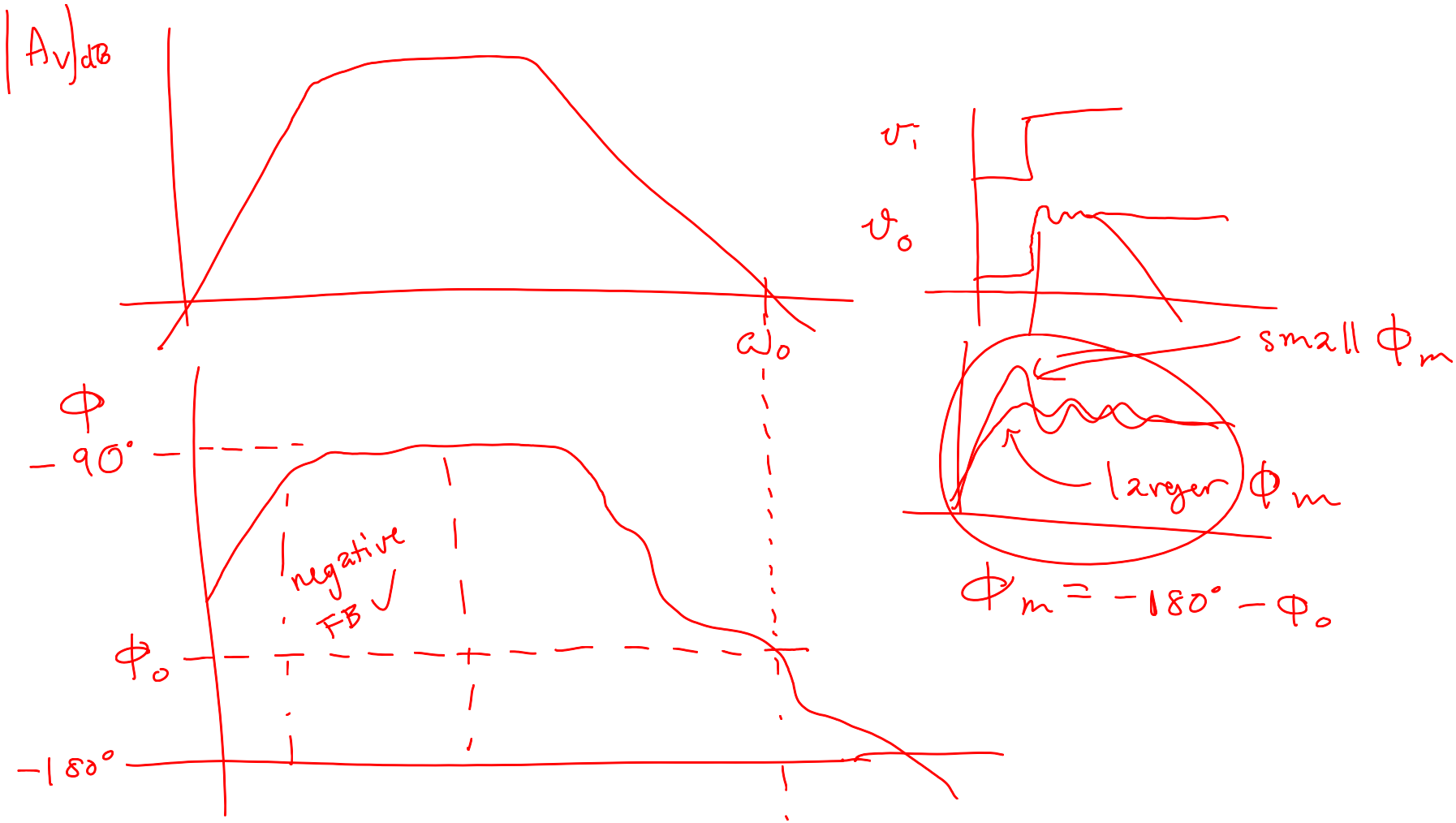

Frequency Compensation