Arrays and Memory Management

Berkeley EECS
ELECTRICAL ENGINEERING & COMPUTER SCIENCES

Pointing to Different Size Objects

- Modern machines are "byte-addressable"
  - Hardware's memory composed of 8-bit storage cells, each has a unique address
- A C pointer is just abstracted memory address
- Type declaration tells compiler how many bytes to fetch on each access through pointer
  - E.g., 32-bit integer stored in 4 consecutive 8-bit bytes
- But we actually want "word alignment"
  - Some processors will not allow you to address 32b values without being on 4 byte boundaries
  - Others will just be very slow if you try to access "unaligned" memory.

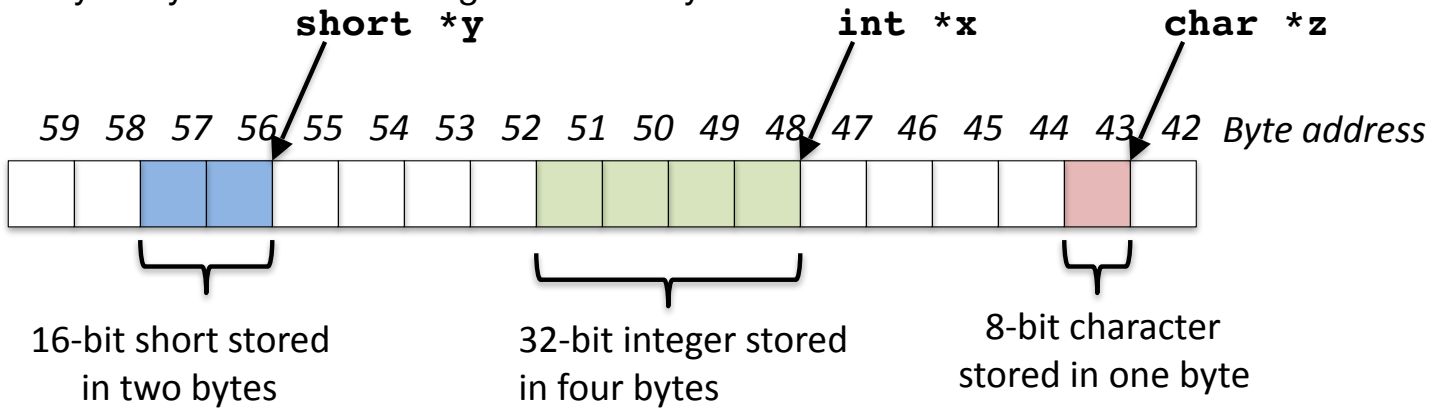

sizeof() operator

- **`sizeof(type)`** returns number of bytes in object
  - But number of bits in a byte is not standardized
    - In olden times, when dragons roamed the earth, bytes could be 5, 6, 7, 9 bits long
- By Standard C99 definition, **`sizeof(char)==1`**
  - C does not play well with Unicode (unlike Python), so no `char c = '💩'`
- Can take **`sizeof(arg)`**, or **`sizeof(structtype)`**
- We'll see more of sizeof when we look at dynamic memory management
  - Remember, C ***does not specify*** **`sizeof(int)`**, so you need to ask it whenever you need to find this out!

Pointer Arithmetic

pointer + number *pointer – number*

e.g., *pointer* **+ 1** adds 1 <u>something</u> to a pointer

```
char   *p;
char    a;
char    b;

p = &a;
p += 1;
```

In each, p now points to b
(Assuming compiler doesn't
reorder variables in memory.
Never code like this!!!!)

```
int   *p;
int    a;
int    b;

p = &a;
p += 1;
```

Adds **`1*sizeof(char)`**
to the memory address

Adds **`1*sizeof(int)`**
to the memory address

Pointer arithmetic should be used <u>cautiously</u>

Valid Pointer Arithmetic

- Add an integer to a pointer.
- Subtracting an integer from a pointer
- Subtract 2 pointers (in the same array & of the same type)
- Compare pointers (<, <=, ==, !=, >, >=)
- Compare pointer to NULL (indicates that the pointer points to nothing)

- Everything else illegal since makes no sense:
  - adding two pointers
  - multiplying pointers
  - subtract pointer from integer

C Arrays

- Declaration:

```
int ar[2];
```

declares a 2-element integer array: just a block of memory which is uninitialized

```
int ar[] = {795, 635};
```

declares and initializes a 2-element integer array

Array Name / Pointer Duality

- *Key Concept*: Array variable is simply a "pointer" to the first (0th) element
- So, array variables almost identical to pointers
  - **`char *string`** and **`char string[]`** are nearly identical declarations
    - Differ in subtle ways: incrementing, declaration of filled arrays
- Consequences:
  - **`ar`** is an array variable, but works like a pointer
  - **`ar[0]`** is the same as **`*ar`**
  - **`ar[2]`** is the same as **`*(ar+2)`**
  - Can use pointer arithmetic to access arrays

C Arrays are Very Primitive

- An array in C does not know its own length, ***and its bounds are not checked***!
  - Consequence: We can accidentally ***access off the end of an array***
  - Consequence: We must pass the array ***and its size*** to any procedure that is going to manipulate it
- Segmentation faults and bus errors:
  - These are VERY difficult to find;
    be careful! (You'll learn how to debug these in lab)
  - But also "fun" to exploit:
    - "Stack overflow exploit", maliciously write off the end of an array on the stack
    - "Heap overflow exploit", maliciously write off the end of an array on the heap

C Strings

- String in C is just an array of characters

```
char string[] = "abc";
```

- How do you tell how long a string is?
  - Last character is followed by a 0 byte (aka “null terminator”): written as 0 (the number) or '\0' as a character

```
int strlen(char s[])
{
    int n = 0;
    while (s[n] != 0){
        n++;
    }
    return n;
}
```

Use Defined Constants

- Array size ***n***; want to access from ***0*** to ***n-1***, so you should use counter AND utilize a variable for declaration & incrementation
  - Bad pattern
    ```
    int i, ar[10];
    for(i = 0; i < 10; i++){ ... }
    ```
  - Better pattern
    ```
    const int ARRAY_SIZE = 10;
    int i, a[ARRAY_SIZE];
    for(i = 0; i < ARRAY_SIZE; i++){ ... }
    ```
- ***SINGLE SOURCE OF TRUTH***
  - You're utilizing indirection and avoiding maintaining two copies of the number 10
  - DRY: "Don't Repeat Yourself"
  - And don't forget the < rather than <=:
    When Nick took 60c, he lost a day to a "segfault in a malloc called by printf on large inputs":
    Had a <= rather than a < in a single array initialization!

Changing a Pointer Argument?

- What if want function to change a pointer?
- What gets printed?

```
void inc_ptr(int *p)
{    p =  p + 1;   }

int A[3] = {50, 60, 70};
int* q = A;
inc_ptr( q);
printf("*q = %d\n", *q);
```

*q = 50

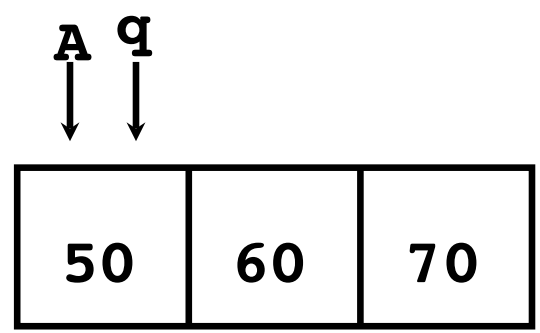

Pointer to a Pointer

- Solution! Pass a pointer to a pointer, declared as ****h**
- Now what gets printed?

```
void inc_ptr(int **h)
{    *h = *h + 1;    }

int A[3] = {50, 60, 70};
int* q = A;
inc_ptr(&q);
printf("*q = %d\n", *q);
```

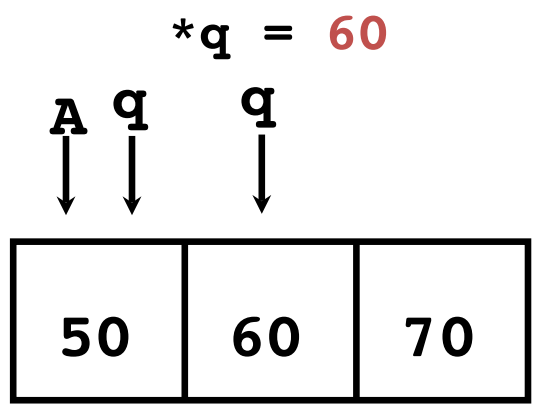

When Arrays Go Bad: Heartbleed

- In TLS encryption, messages have a length…
  - And get copied into memory before being processed
- One message was "Echo Me back the following data, its this long..."
  - But the (different) echo length wasn't checked to make sure it wasn't too big...

```
M 5 HB L=5000 107:Oul7;GET / HTTP/1.1\r\n
Host: www.mydomain.com\r\nCookie: login=1
17kf9012oeu\r\nUser-Agent: Mozilla….
```

- So you send a small request that says "read back a lot of data"
  - And thus get web requests with auth cookies and other bits of data from random bits of memory…

Arrays and Pointers

- Array ≈ pointer to the initial element
  - `a[i] ≡ *(a+i)`
- An array is passed to a function as a pointer
  - The array size is lost!
- Usually bad style to interchange arrays and pointers
  - Avoid pointer arithmetic!
    - Especially avoid things like `ar++`;

Passing arrays:

Really `int *array`

Must explicitly pass the size

```
int
foo(int array[],
    unsigned int size)
{
   … array[size - 1] …
}

int
main(void)
{
   int a[10], b[5];
   … foo(a, 10)… foo(b, 5) …
}
```

Arrays and Pointers


```
int
foo(int array[],
    unsigned int size)
{
   …
   printf("%d\n", sizeof(array));
}

int
main(void)
{
   int a[10], b[5];
   … foo(a, 10)… foo(b, 5) …
   printf("%d\n", sizeof(a));
}
```

What does this print? **4**

... because **`array`** is really a pointer (and a pointer is architecture dependent, but likely to be 4 or 8 on modern 32-64 bit machines!)

What does this print? **40**

Arrays and Pointers


```
int  i;
int  array[10];

for (i = 0; i < 10; i++)
{
  array[i] = …;
}
```

```
int *p;
int  array[10];

for (p = array; p < &array[10]; p++)
{
  *p = …;
}
```

These code sequences have the same effect!

But the former is ***much more readable***:
Especially don't want to see code like **`ar++`**

Clickers/Peer Instruction Time


```
int x[] = { 2, 4, 6, 8, 10 };
int *p = x;
int **pp = &p;
(*pp)++;
(*(*pp))++;
printf("%d\n", *p);
```

Result is:

A: 2

B: 3

C: 4

D: 5

E: None of the above

Clickers/Peer Instruction Time


```
int x[] = { 2, 4, 6, 8, 10 };
int *p = x;
int **pp = &p;
(*pp)++;
(*(*pp))++;
printf("%d\n", *p);
```

P points to the start of X (2)
PP points to P

Increments P point to 2nd element (4)
Increments 2nd element by 1 (5)

Result is:

A: 2

B: 3

C: 4

D: 5

E: None of the above

Administrivia

- hw0 - edX is due on 2/13
- hw0 mini bio is due in second section
- Project 1 and the first lab will be out RSN
  - "Real Soon Now"
- MT1 will be Friday, 2/24 from 7 PM - 9 PM
- MT2 will be Thursday, 4/06 from 7 PM - 9 PM
  - Email the head Rebecca and Stephen for conflicts

Concise strlen()


```
int strlen(char *s)
{
    char *p = s;
    while (*p++)
       ; /* Null body of while */
    return (p - s - 1);
}
```

What happens if there is no zero character at end of string?

Arguments in `main()`

- To get arguments to the main function, use:
  - **`int main(int argc, char *argv[])`**
- What does this mean?
  - **`argc`** contains the number of strings on the command line (the executable counts as one, plus one for each argument). Here **`argc`** is 2:
    - **`unix% sort myFile`**
  - **`argv`** is a pointer to an array containing the arguments as strings
    - Since it is an array of pointers to character arrays
    - Sometimes written as **`char **argv`**

Example

- `foo hello 87 "bar baz"`
- `argc = 4 /* number arguments */`
- `argv[0] = "foo",`
  `argv[1] = "hello",`
  `argv[2] = "87",`
  `argv[3] = "bar baz",`
  - Array of pointers to strings

C Memory Management

- How does the C compiler determine where to put all the variables in machine's memory?
- How to create dynamically sized objects?
- To simplify discussion, we assume *one program runs at a time*, with access to all of memory.
- Later, we'll discuss ***virtual memory***, which lets multiple programs all run at same time, each thinking they own all of memory.

C Memory Management

- Program's address space contains 4 regions:
  - ***stack***: local variables inside functions, grows downward
  - ***heap***: space requested for dynamic data via **`malloc()`** resizes dynamically, grows upward
  - ***static data***: variables declared outside functions, does not grow or shrink. Loaded when program starts, can be modified.
  - ***code***: loaded when program starts, does not change

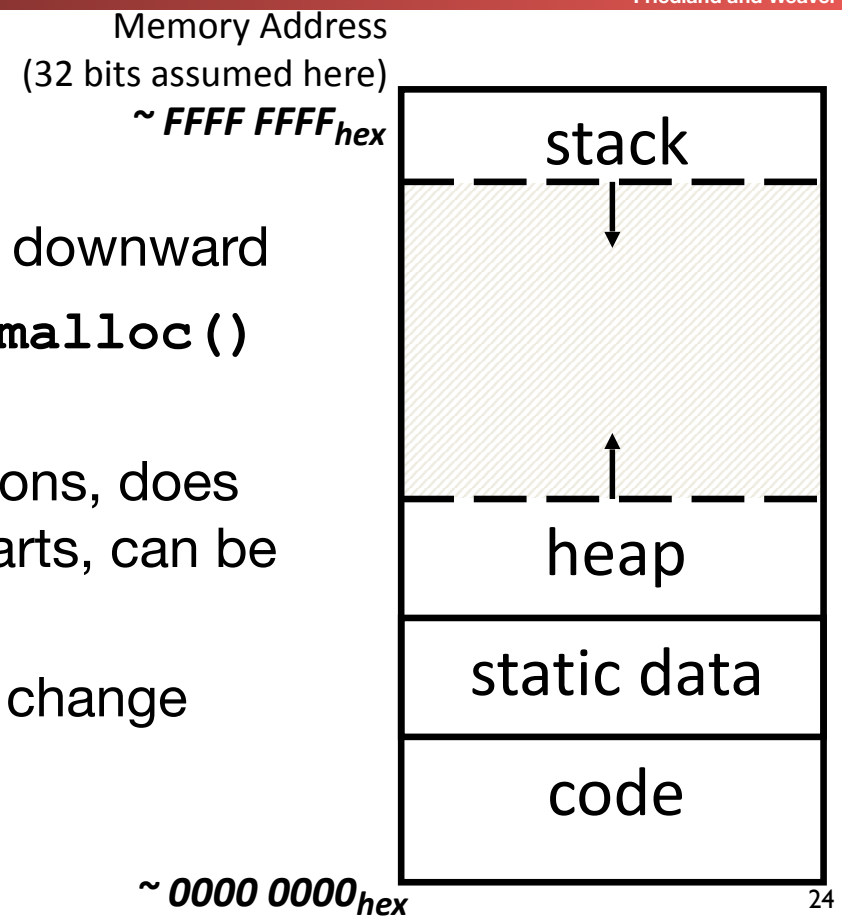

Where are Variables Allocated?

- If declared outside a function, allocated in "static" storage
- If declared inside function, allocated on the "stack" and freed when function returns
  - `main()` is treated like a function
- For both of these types of memory, the management is automatic:
  - You don't need to worry about deallocating when you are no longer using them

```
int myGlobal;
main() {
   int myTemp;
}
```

The Stack

- Every time a function is called, a new frame is allocated on the stack
- Stack frame includes:
  - Return address (who called me?)
  - Arguments
  - Space for local variables
- Stack frames uses contiguous blocks of memory; stack pointer indicates start of stack frame
- When function ends, stack pointer moves up; frees memory for future stack frames
- We'll cover details later for MIPS processor

```
fooA() { fooB(); }
fooB() { fooC(); }
fooC() { fooD(); }
```

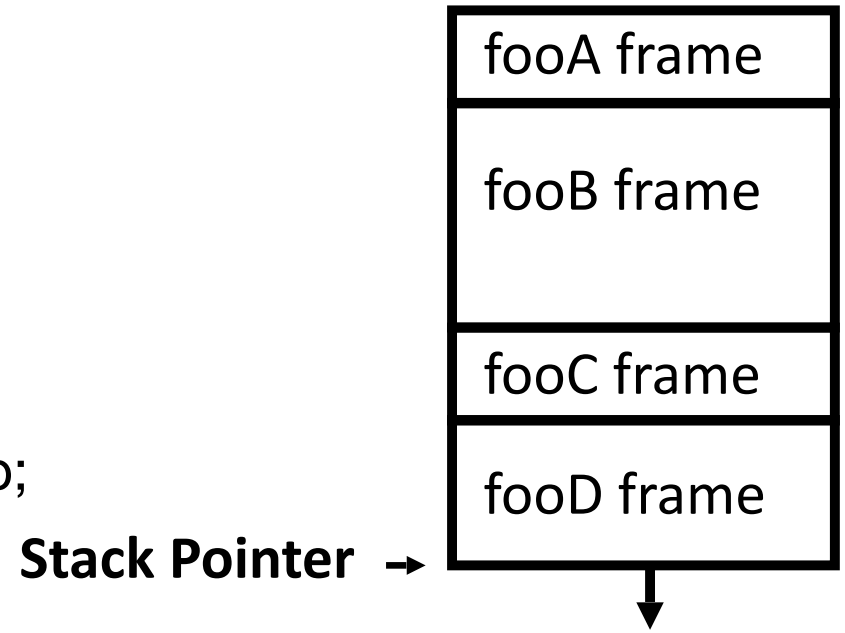

Stack Animation

- Last In, First Out (LIFO) data structure

```
main ()
{ a(0);
}
  void a (int m)
  { b(1);
  }
    void b (int n)
    { c(2);
    }
      void c (int o)
      { d(3);
      }
       void d (int p)
       {
       }
```

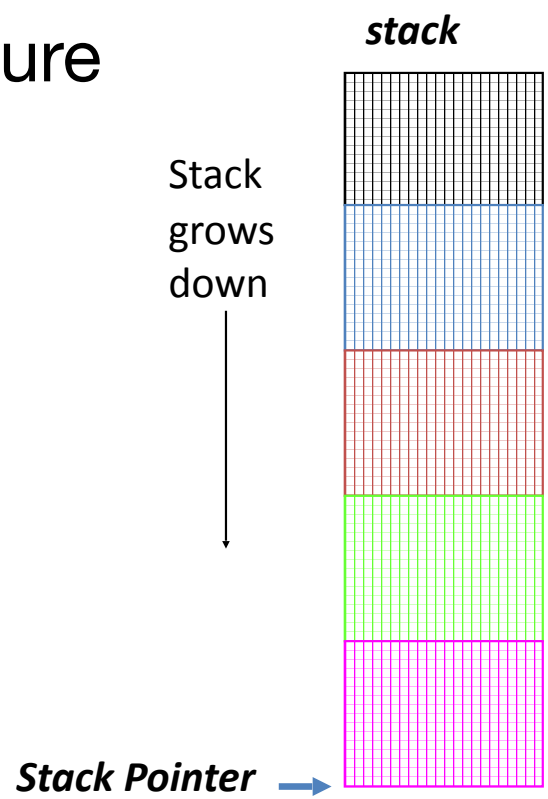

Managing the Heap

C supports functions for heap management:

- **`malloc()`** allocate a block of uninitialized memory
- **`calloc()`** allocate a block of zeroed memory
- **`free()`** free previously allocated block of memory
- **`realloc()`** change size of previously allocated block
  - careful – it might move!
    - And it ***will not update other pointers pointing to the same block of memory***

Malloc()

- **`void *malloc(size_t n)`:**
  - Allocate a block of uninitialized memory
  - NOTE: Subsequent calls probably will not yield adjacent blocks
  - **`n`** is an integer, indicating size of requested memory block in bytes
  - **`size_t`** is an unsigned integer type big enough to "count" memory bytes
  - Returns **`void*`** pointer to block; **`NULL`** return indicates no more memory (check for it!)
  - Additional control information (including size) stored in the heap for each allocated block.
- Examples:

"Cast" operation, changes type of a variable.
Here changes ***`(void *)`*** *to* ***`(int *)`***

```
int *ip;
ip = (int *) malloc(sizeof(int));
```

```
typedef struct { … } TreeNode;
TreeNode *tp = (TreeNode *) malloc(sizeof(TreeNode));
```

- **`sizeof`** returns size of given type in bytes, ***necessary if you want portable code!***

And then free()

- **`void free(void *p):`**
  - **`p`** is a pointer containing the address originally returned by **`malloc()`**
- Examples:
  - ```
    int *ip;
    ip = (int *) malloc(sizeof(int));
    ... .. ..
    free((void*) ip); /* Can you free(ip) after ip++ ? */
    ```
  - ```
    typedef struct {… } TreeNode;
    TreeNode *tp = (TreeNode *) malloc(sizeof(TreeNode));
    ... .. ..
    free((void *) tp);
    ```
- When you free memory, you must be sure that you pass the original address returned from **`malloc()`** to **`free()`**; Otherwise, crash (or worse)!

Using Dynamic Memory


```
typedef struct node {
  int key;
  struct node *left; struct node
*right;
} Node;

Node *root = NULL;

Node *create_node(int key, Node
*left,
      Node *right){
  Node *np;
  if(!(np =
       (Node*) malloc(sizeof(Node))){
     printf("Memory exhausted!\n");
     exit(1);}
  else{
     np->key = key;
     np->left = left;
     np->right = right;
     return np;
   }
}
```

```
void insert(int key, Node **tree){
   if ((*tree) == NULL){
     (*tree) = create_node(key, NULL,
           NULL);
   }
   else if (key <= (*tree)->key){
     insert(key, &((*tree)->left));
   }
   else{
     insert(key, &((*tree)->right));
   }
}


int main(){
  insert(10, &root);
  insert(16, &root);
  insert(5, &root);
  insert(11 , &root);
  return 0;
}
```

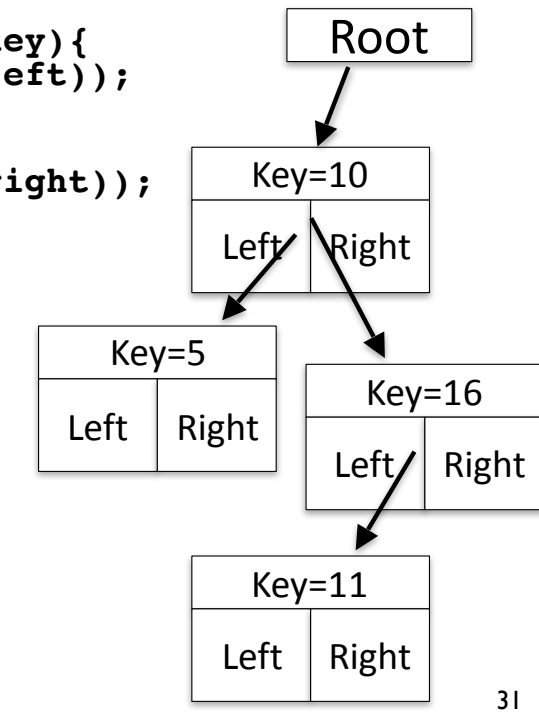

Observations

- Code, Static storage are easy: they never grow or shrink
- Stack space is relatively easy: stack frames are created and destroyed in last-in, first-out (LIFO) order
- Managing the heap is tricky: memory can be allocated / deallocated at any time
  - If you forget to deallocate memory: "Memory Leak"
    - Your program ***will eventually run out of memory***
  - If you call free twice on the same memory: "Double Free"
    - Possible ***crash or exploitable vulnerability***
  - If you use data after calling free: "Use after free"
    - Possible ***crash or exploitable vulnerability***

And In Conclusion, …

- C has three main memory segments in which to allocate data:
  - Static Data: Variables outside functions
  - Stack: Variables local to function
  - Heap: Objects explicitly malloc-ed/free-d.
- Heap data is biggest source of bugs in C code