CS61B Lecture #6: Arrays

Readings for Monday : Chapters 2, 4 of *Head First Java* (5 also useful, but its really review).

Upcoming readings : Chapters 7, 8 of *Head First Java*.

Public Service Announcement. HKN has free drop-in tutoring M-F 11AM–5PM in 290 Cory and 330 Soda. Visit `hkn.eecs.berkeley.edu` to find out about all of our student services:

- Weekly Tutoring Schedule
- Midterm Review Sessions
- Exam Archive
- Course Surveys
- Course Guide

Arrays

- An array is a structured container whose components are
  - **length**, a fixed integer.
  - a sequence of **length** simple containers of the same type, numbered from 0.
  - (.length field usually implicit in diagrams.)
- Arrays are anonymous, like other structured containers.
- Always referred to with pointers.
- For array pointed to by `A`,
  - Length is `A.length`
  - Numbered component i is `A[`i`]` (i is the *index*)
  - Important feature: index can be *any integer expression*.

A Few Samples

Java

```
int[] x, y, z;
String[] a;
x = new int[3];
y = x;
a = new String[3];
x[1] = 2;
y[1] = 3;
a[1] = "Hello";

int[] q;
q = new int[] { 1, 2, 3 };
// Short form for declarations:
int[] r = { 7, 8, 9 };
```

Results

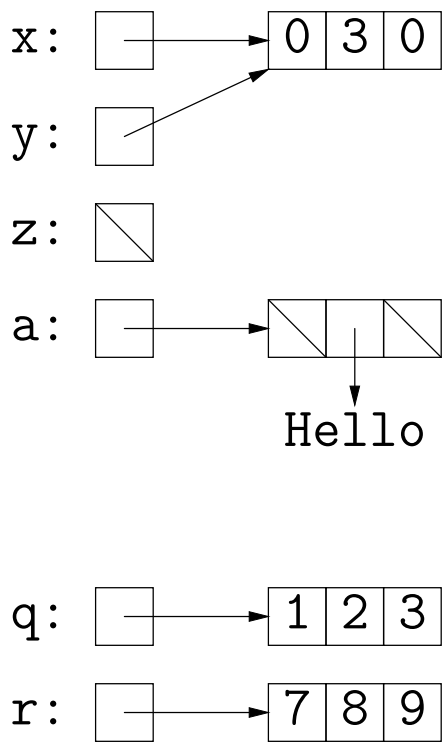

Example: Accumulate Values

Problem: Sum up the elements of array A.

```
static int sum (int[] A) {
  int N;
  N = 0;
  for (int i = 0; i < A.length; i += 1)
    N += A[i];
  return N;
}
```

```
// New (1.5) syntax
for (int x : A)
   N += x;
```

```
// For the hard-core: could have written

int N, i;
for (i=0, N=0; i<A.length; N += A[i], i += 1)
  { }   // or just ;

// But please don't: it's obscure.
```

Example: Insert into an Array

Problem: Want a call like `insert (A, 2, "gnu")` to convert (destructively)

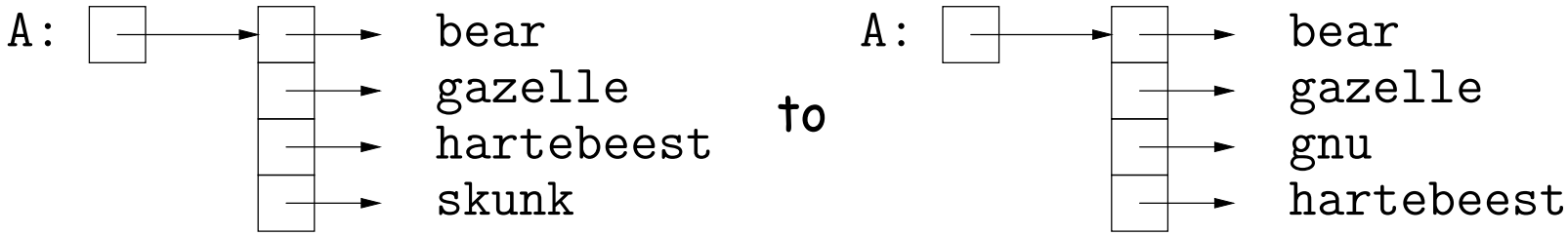


```
/** Insert X at location K in ARR, moving items
 *  K, K+1, ... to locations K+1, K+2, ....
 *  The last item in ARR is lost. */
static void insert (String[] arr, int k, String x) {
  for (int i = arr.length-1; i > k; i -= 1) // Why backwards?
    arr[i] = arr[i-1];
  // Alternative to this loop:
  //    System.arraycopy ( arr, k,  arr, k+1,  arr.length-k-1);
                           from      to        # to copy
  arr[k] = x;
}
```

Useful tip: Can write just '`arraycopy`' by including at top of file:

```
import static java.lang.System.*;
```

Growing an Array

Problem: Suppose that we want to change the description above, so that `A = insert2 (A, 2, "gnu")` does *not* shove "skunk" off the end, but instead "grows" the array.

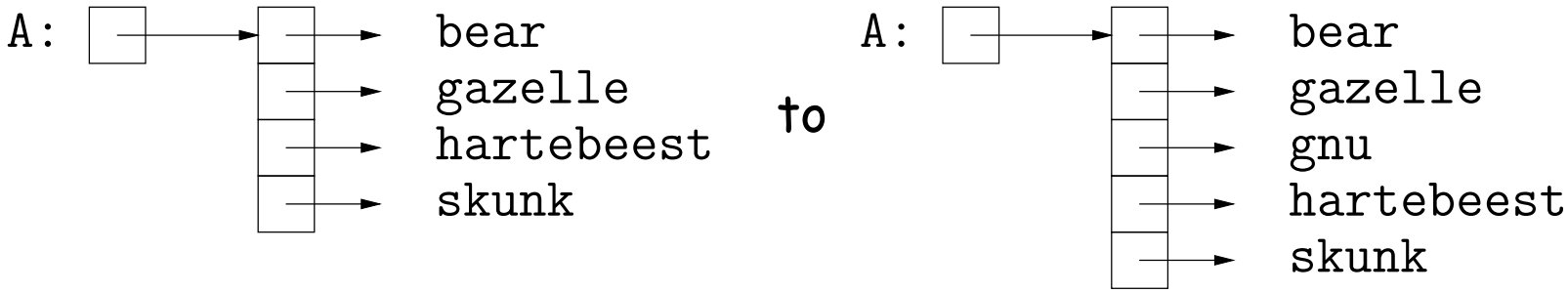


```
/** Return array, r, where r.length = ARR.length+1; r[0..K-1]
 *  the same as ARR[0..K-1], r[k] = x, r[K+1..] same as ARR[K..]. */
static String[] insert2 (String[] arr, int k, String x) {
  String[] result = new String[arr.length + 1];
  arraycopy (arr, 0, result, 0, k);
  arraycopy (arr, k, result, k+1, arr.length-k);
  result[k] = x;
  return result;
}
```

- Why do we need a different return type from `insert`??

Example: Merging

Problem: Given two sorted arrays of ints, A and B, produce their *merge:* a sorted array containing all items from A and B.

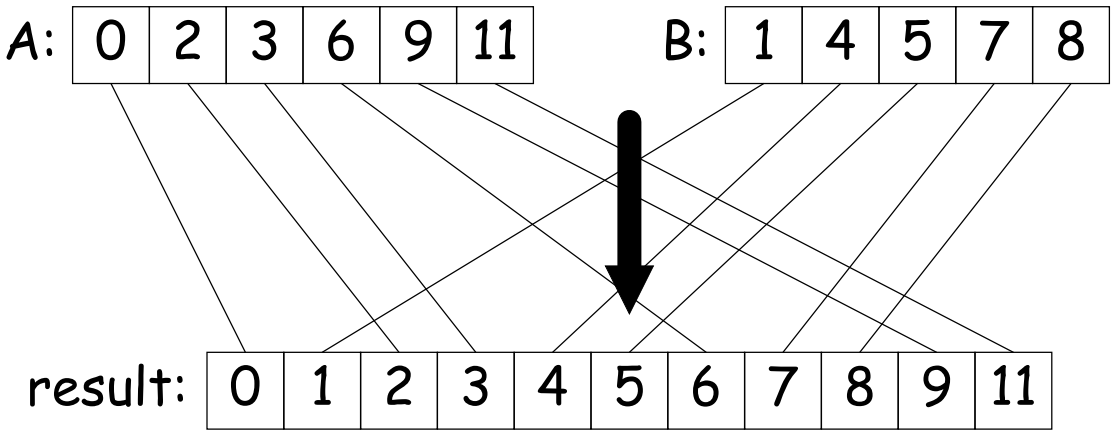

Example: Merging Program

Problem: Given two sorted arrays of ints, A and B, produce their *merge:* a sorted array containing all from A and B.

```
/** Assuming A and B are sorted, returns their merge. */
public static int[] merge(int[] A, int[] B) {
   return merge(A, 0, A.length-1, B, 0, B.length-1);
}

/** The merge of A[L0..U0] and B[L1..U1] assuming A and B sorted. */
static int[] merge(int[] A, int L0, int U0, int[] B, int L1, int U1) {
   int N = U0 - L0 + U1 - L1 + 2;
   int[] C = new int[N];
   if (U0 < L0) arraycopy (B, L1, C, 0, N);
   else if (U1 < L1) arraycopy (A, L0, C, 0, N);
   else if (A[L0] <= B[L1]) {
      C[0] = A[L0]; arraycopy (merge(A, L0+1, U0, B, L1, U1), 0, C, 1, N-1);
   } else {
      C[0] = B[L1]; arraycopy (merge(A, L0, U0, B, L1+1, U1), 0, C, 1, N-1);
   }
   return C;
}
```

What is wrong with this implementation?

A Tail-Recursive Strategy

```
public static int[] merge(int[] A, int[] B) {
   return merge(A, 0, A.length-1, B, 0, B.length-1,
                new int[A.length+B.length], 0);
}

/** Merge A[L0..U0] and B[L1..U1] into C[K...], assuming A and B sorted. */
static int[] merge(int[] A, int L0, int U0, int[] B, int L1, int U1, int[] C, int k){
   ...
}
```

This last method merges *part* of `A` with part of `B` into part of `C`. For example, consider a possible call `merge(A, 2, 4, B, 1, 4, C, 3)`

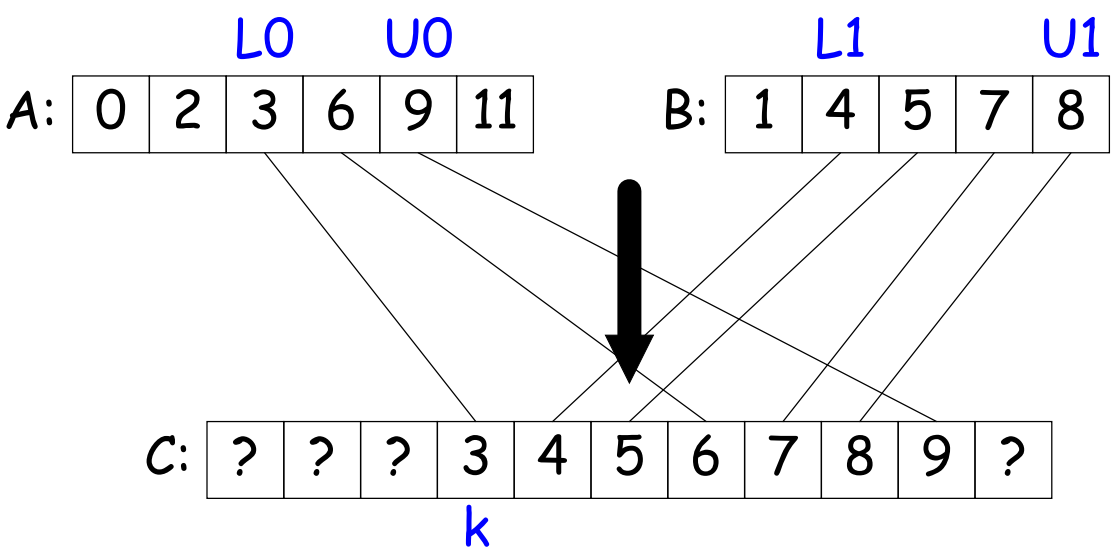

A Tail-Recursive Solution

```
public static int[] merge(int[] A, int[] B) {
   return merge(A, 0, A.length-1, B, 0, B.length-1,
                new int[A.length+B.length], 0);
}

/** Merge A[L0..U0] and B[L1..U1] into C[K...], assuming A and B sorted. */
static int[] merge(int[] A, int L0, int U0, int[] B, int L1, int U1, int[] C, int k){
   if (U0 < L0) /* ?  */
   else if (U1 < L1) /* ?  */
   else if (A[L0] <= B[L1]) {
      C[k] = A[L0];
      /* ?  */
   } else {
      C[k] = B[L1];
      /* ?  */
   }
   return C;
}
```

A Tail-Recursive Solution

```
public static int[] merge(int[] A, int[] B) {
   return merge(A, 0, A.length-1, B, 0, B.length-1,
                new int[A.length+B.length], 0);
}

/** Merge A[L0..U0] and B[L1..U1] into C[K...], assuming A and B sorted. */
static int[] merge(int[] A, int L0, int U0, int[] B, int L1, int U1, int[] C, int k){
   if (U0 < L0) /* ?  */
   else if (U1 < L1) /* ?  */
   else if (A[L0] <= B[L1]) {
      C[k] = A[L0];
      /* ?  */
   } else {
      C[k] = B[L1];
      /* ?  */
   }
   return C;
}
```

A Tail-Recursive Solution

```
public static int[] merge(int[] A, int[] B) {
   return merge(A, 0, A.length-1, B, 0, B.length-1,
                new int[A.length+B.length], 0);
}

/** Merge A[L0..U0] and B[L1..U1] into C[K...], assuming A and B sorted. */
static int[] merge(int[] A, int L0, int U0, int[] B, int L1, int U1, int[] C, int k){
   if (U0 < L0) arraycopy(B, L1, C, k, U1-L1+1);
   else if (U1 < L1) arraycopy(A, L0, C, k, U0-L0+1);
   else if (A[L0] <= B[L1]) {
      C[k] = A[L0];
      /* ?  */
   } else {
      C[k] = B[L1];
      /* ?  */
   }
   return C;
}
```

A Tail-Recursive Solution

```
public static int[] merge(int[] A, int[] B) {
   return merge(A, 0, A.length-1, B, 0, B.length-1,
                new int[A.length+B.length], 0);
}

/** Merge A[L0..U0] and B[L1..U1] into C[K...], assuming A and B sorted. */
static int[] merge(int[] A, int L0, int U0, int[] B, int L1, int U1, int[] C, int k){
   if (U0 < L0) arraycopy(B, L1, C, k, U1-L1+1);
   else if (U1 < L1) arraycopy(A, L0, C, k, U0-L0+1);
   else if (A[L0] <= B[L1]) {
      C[k] = A[L0];
      merge(A, L0+1, U0, B, L1, U1, C, k+1);
   } else {
      C[k] = B[L1];
      merge(A, L0, U0, B, L1+1, U1, C, k+1);
   }
   return C;
}
```

Iterative Solution

In general, we don't use either of the previous approaches in languages like C and Java. Array manipulation is most often iterative:

```
public static int[] merge(int[] A, int[] B) {
   int[] C = new int[A.length + B.length];



}
```

Iterative Solution II

```
public static int[] merge(int[] A, int[] B) {
   int[] C = new int[A.length + B.length];
   int L0, L1;
   L0 = L1 = 0;
   for (int k = 0; k < C.length; k += 1) {
       if (L0 >= A.length) {
           C[k] = B[L1]; L1 += 1;
       } else if (L1 >= B.length) {
           C[k] = A[L0]; L0 += 1;
       } else if (A[L0] <= B[L1]) {
           C[k] = A[L0]; L0 += 1;
       } else {
           C[k] = B[L1]; L1 += 1;
       }
   }
   return C;
}
```

Multidimensional Arrays

- What about two- or higher-dimensional layouts, such as

$A =$

2	3	4	5
4	9	16	25
8	27	64	125

- Not primitive in Java, but we can build them as arrays of arrays:

```
  int[][] A = new int[3][];
  A[0] = new int[] {2, 3, 4, 5};
  A[1] = new int[] {4, 9, 16, 25};
  A[2] = new int[] {8, 27, 64, 125};
// or
  int[][] A;
  A = new int[][] { {2, 3, 4, 5}, {4, 9, 16, 25}, { 8, 27, 64, 125} };
// or
  int[][] A = { {2, 3, 4, 5}, {4, 9, 16, 25}, {8, 27, 64, 125} };
// or
  int[][] A = new A[3][4];
  for (int i = 0; i < 3; i += 1)
      for (int j = 0; j < 4; j += 1)
          A[i][j] = (int) Math.pow(j + 2, i + 1);
```

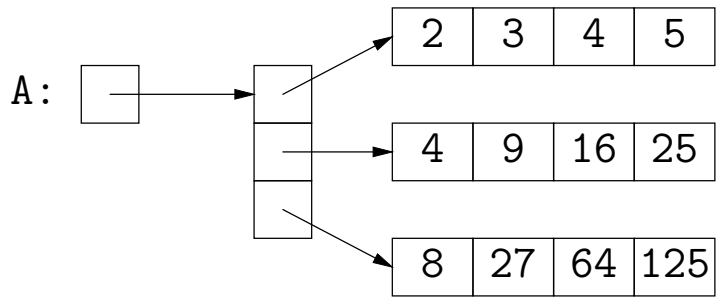

Exotic Multidimensional Arrays

- Since every element of an array is independent, there is no single "width" in general:

```
int[][] A = new int[5][];
A[0] = new int[] {};
A[1] = new int[] {0, 1};
A[2] = new int[] {2, 3, 4, 5};
A[3] = new int[] {6, 7, 8};
A[4] = new int[] {9};
```

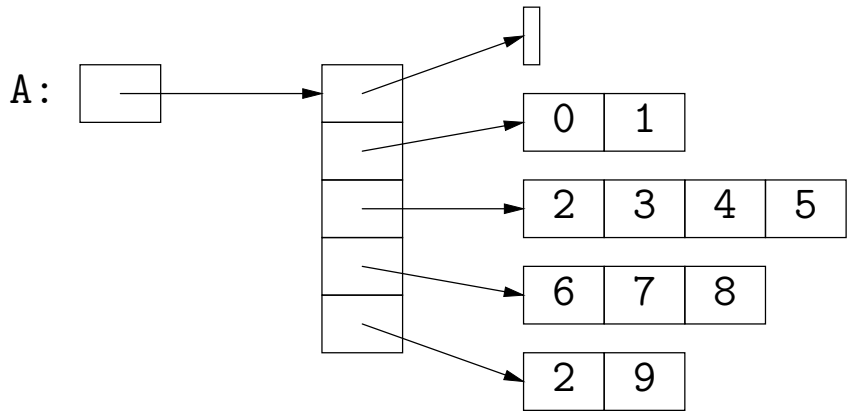

- What does this print?

```
int[][] ZERO = new int[3][];
ZERO[0] = ZERO[1] = ZERO[2] = new int[] {0, 0, 0};
ZERO[0][1] = 1;
System.out.println(ZERO[2][1]);
```

Exotic Multidimensional Arrays

- Since every element of an array is independent, there is no single "width" in general:

```
int[][] A = new int[5][];
A[0] = new int[] {};
A[1] = new int[] {0, 1};
A[2] = new int[] {2, 3, 4, 5};
A[3] = new int[] {6, 7, 8};
A[4] = new int[] {9};
```

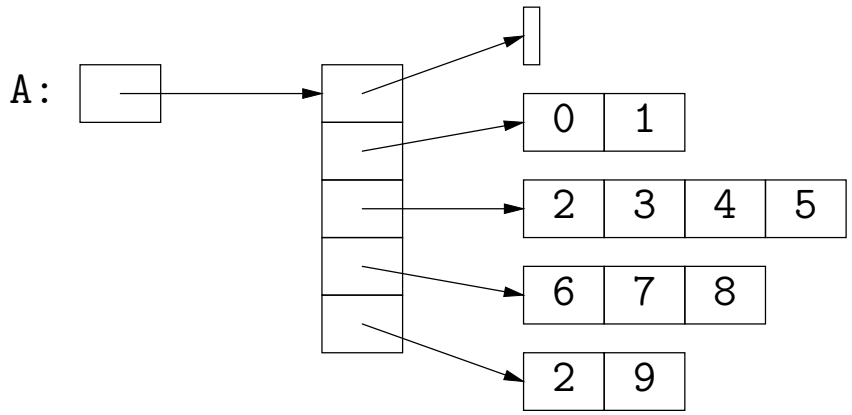

- What does this print?

```
int[][] ZERO = new int[3][];
ZERO[0] = ZERO[1] = ZERO[2] = new int[] {0, 0, 0};
ZERO[0][1] = 1;
System.out.println(ZERO[2][1]);
```