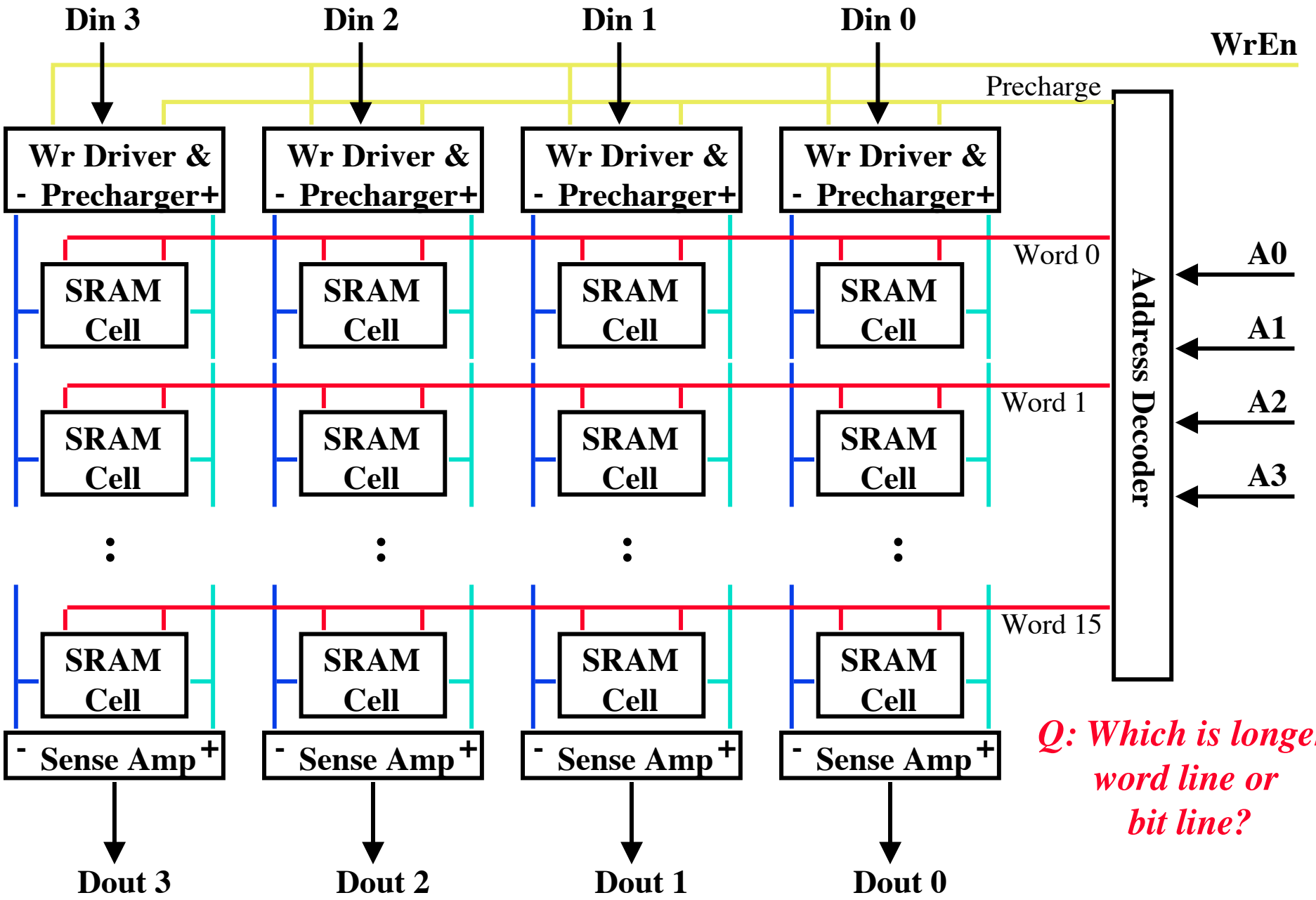

Q: Which is longer: word line or bit line?