3.13 The best way to tackle this problem is to label the intermediate gates, and calculate their outputs first.

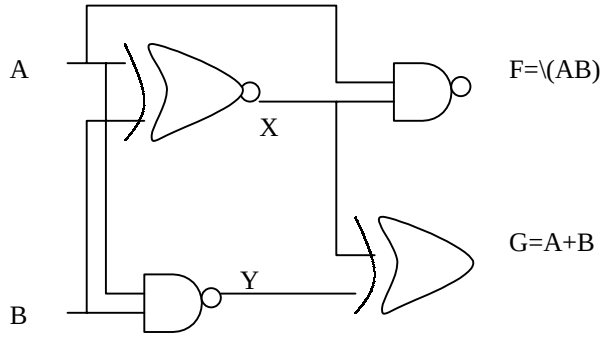

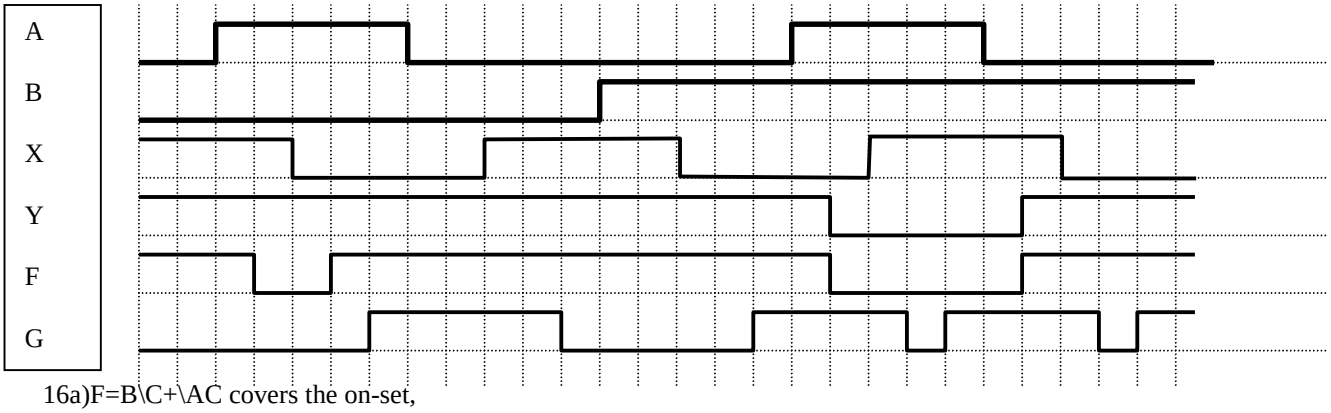

16a)F=B\C+\AC covers the on-set,
but has a 1 hazard.
F=B\C+\AC+\AB is hazard free

0	1	1	0
1	1	0	0

A, B, C

16b)minterms(0,4,5,6,7,9,11,13,14)
F=\AB+\A\C\D+A\CD+A\BD+BC\D covers the on-set
F=\AB+\A\C\D+A\CD+A\BD+BC\D+B\CD is hazard free in SOP

1	1	0	0
0	1	1	1
0	1	0	1
0	1	1	0

A, B, C, D

16c)F=(A+B)(\B+C) has a 0 hazard
F=(A+B)(\B+C)(A+C) doesn't.

0	0	0	1
0	1	1	1

A, B, C

16d) Maxterms(0,1,3,5,7,8,9,13,15)
Use POS and circle \CD as a redundant, or use SOP
F=B\D+C\D+A\BC

0	1	1	0
0	0	0	0
0	0	0	1
1	1	1	1

A, B, C, D