CS150 Homework 9 Solutions

1. a. How would figure 11.5 change if Harvard architecture was used? (Katz 11.3)

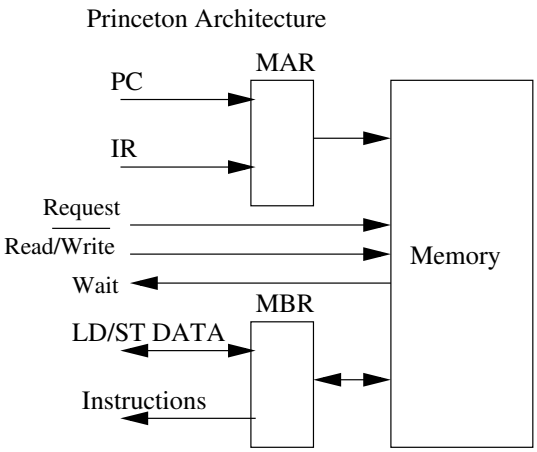

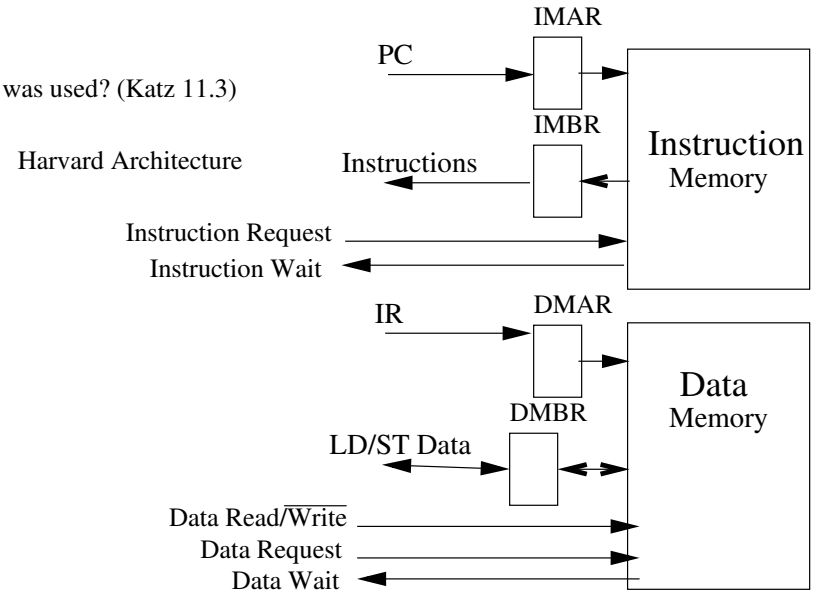

1. b. How would the state diagram in figure 11.23 change for Harvard architecture?
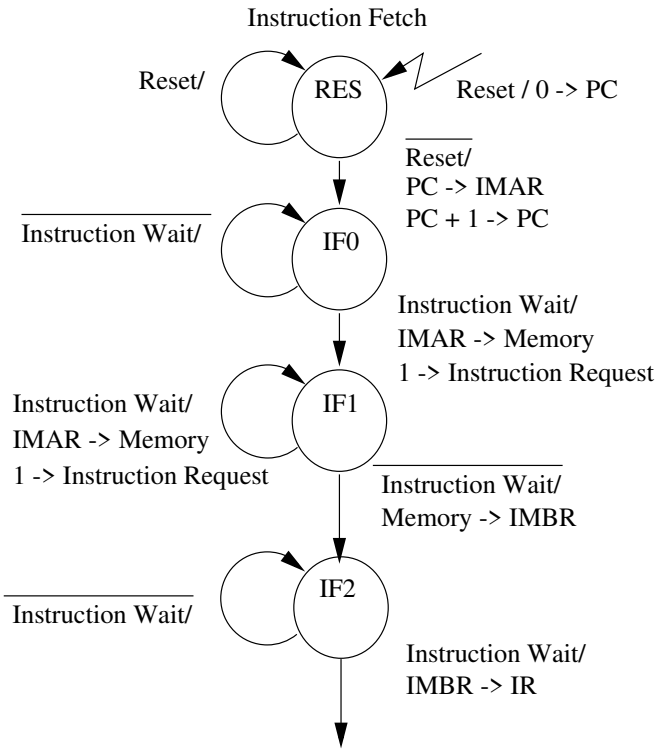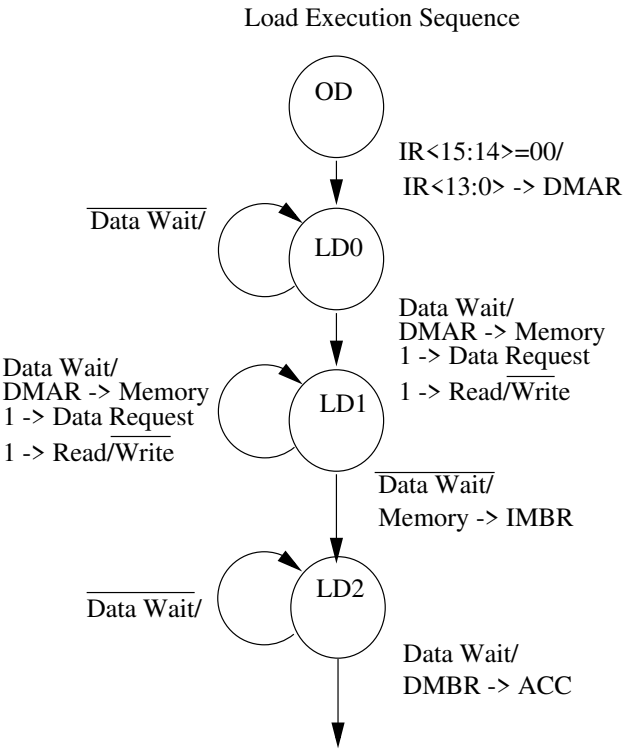
Harvard architecture allows for Instruction prefetch (See problem 11.4. Instruction prefetch is when the next instruction can be fetched while the present instruction is executing.) But in this problem you didn't need to worry this "pipelinig".