Digital Design and System Implementation

- Overview of Physical Implementations
- CMOS devices
- CMOS transistor circuit functional behavior
  - Basic logic gates
  - Transmission gates
  - Tri-state buffers
  - Flip-flops vs. latches revisited

Overview of Physical Implementations

The stuff out of which we make systems

- Integrated Circuits (ICs)
  - Combinational logic circuits, memory elements, analog interfaces
- Printed Circuits (PC) boards
  - substrate for ICs and interconnection, distribution of CLK, Vdd, and GND signals, heat dissipation
- Power Supplies
  - Converts line AC voltage to regulated DC low voltage levels
- Chassis (rack, card case, ...)
  - holds boards, power supply, fans, provides physical interface to user or other systems
- Connectors and Cables

Integrated Circuits

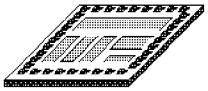

- Primarily Crystalline Silicon
- 1mm - 25mm on a side
- 100 - 200M transistors
- (25 - 50M "logic gates")
- 3 - 10 conductive layers
- 2005 - feature size ~ 90nm = 0.09 x 10^{-6} m
- "CMOS" most common - complementary metal oxide semiconductor

Chip in Package

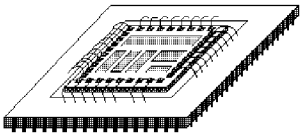

- Package provides:
  - spreading of chip-level signal paths to board-level
  - heat dissipation.
- Ceramic or plastic with gold wires

Printed Circuit Boards

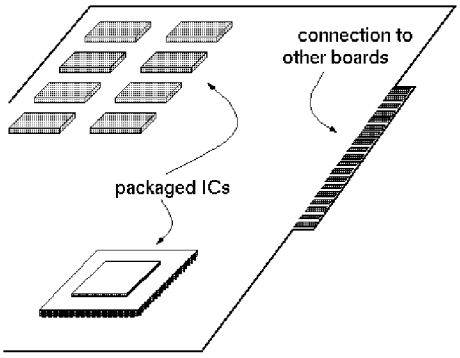

- fiberglass or ceramic
- 1-25 conductive layers
- 1-20in on a side
- IC packages are soldered down

Multichip Modules (MCMs)

- Multiple chips directly connected to a substrate (silicon, ceramic, plastic, fiberglass) without chip packages

Integrated Circuits

- Moore's Law has fueled innovation for the last 3 decades

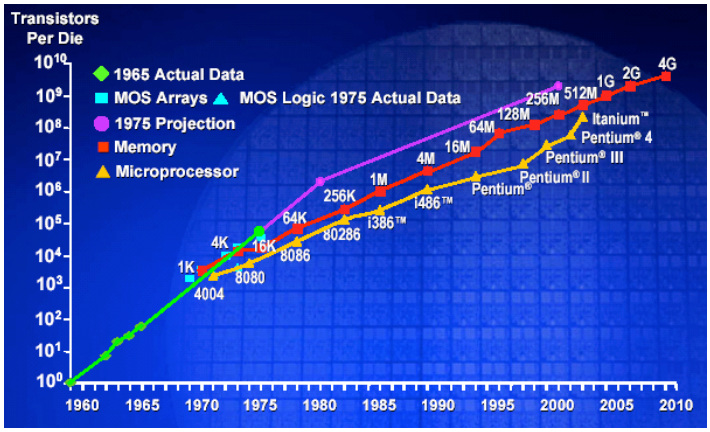

- "Number of transistors on a die doubles every 18 months."
- What are the consequences of Moore's law?

Integrated Circuits

- Uses for digital IC technology today:
  - Standard microprocessors
    - Used in desktop PCs, and embedded applications (ex: automotive)
    - Simple system design (mostly software development)
  - Memory chips (DRAM, SRAM)
  - Application specific ICs (ASICs)
    - custom designed to match particular application
    - can be optimized for low-power, low-cost, high-performance
    - high-design cost / relatively low manufacturing cost
  - Field programmable logic devices (FPGAs, CPLDs)
    - customized to particular application after fabrication
    - short time to market
    - relatively high part cost
  - Standardized low-density components
    - still manufactured for compatibility with older system designs

CMOS Devices

- MOSFET (Metal Oxide Semiconductor Field Effect Transistor)

Top View

Cross Section

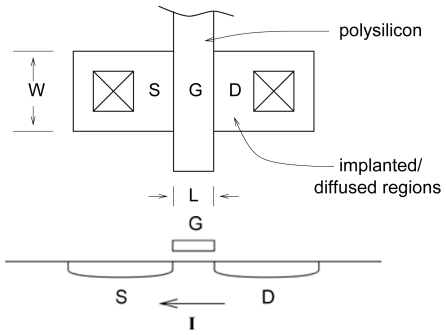

The gate acts like a capacitor. A high voltage on the gate attracts charge into the channel. If a voltage exists between the source and drain a current will flow. In its simplest approximation, the device acts like a switch.

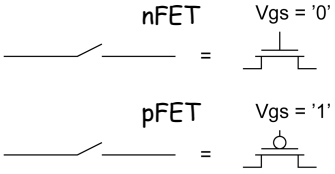

Transistor-level Logic Circuits

- Inverter (NOT gate):

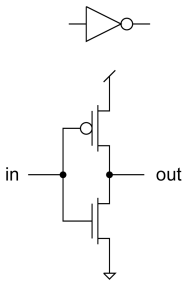

- NAND gate

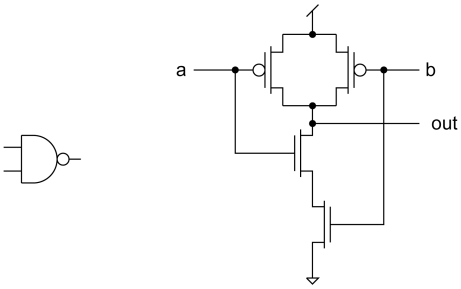

- Note:
  - out = 0 iff both a AND b = 1 therefore out = (ab)'
  - pFET network and nFET network are *duals* of one another.

How about AND gate?

Transistor-level Logic Circuits

Simple rule for wiring up MOSFETs:

- nFET is used only to pass logic zero
- pFet is used only to pass logic one
- For example, NAND gate:

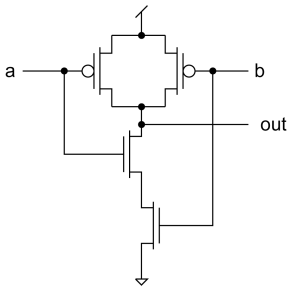

Note: This rule is sometimes violated by expert designers under special conditions

Transistor-level Logic Circuits

- NAND gate

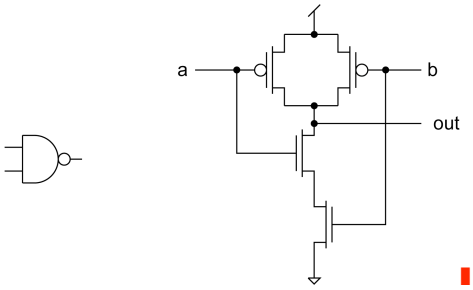

- NOR gate

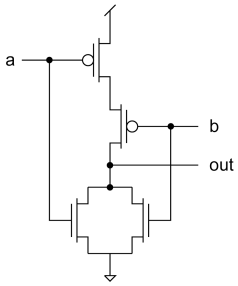

- Note:
  - out = 0 iff both a OR b = 1 therefore out = (a+b)'
  - Again pFET network and nFET network are *duals* of one another

Other more complex functions are possible. Ex: out = (a+bc)'

Transmission Gate

- Transmission gates are the way to build "switches" in CMOS
- In general, both transistor types are needed:
  - nFET to pass zeros
  - pFET to pass ones
- The transmission gate is bi-directional (unlike logic gates)

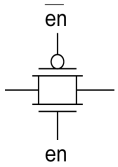

- Does not directly connect to Vdd and GND, but can be combined with logic gates or buffers to simplify many logic structures

Pass-Transistor Multiplexer

- 2-to-1 multiplexer:

  c = sa + s'b

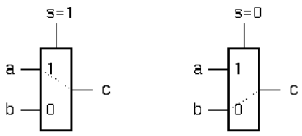

- Switches simplify the implementation:

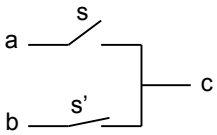

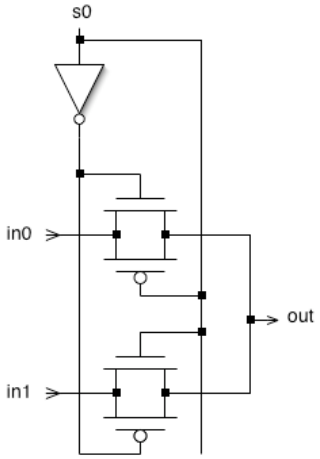

4-to-1 Pass-transistor Mux

- The series connection of pass-transistors in each branch effectively forms the AND of s1 and s0 (or their complement)
- 20 transistors

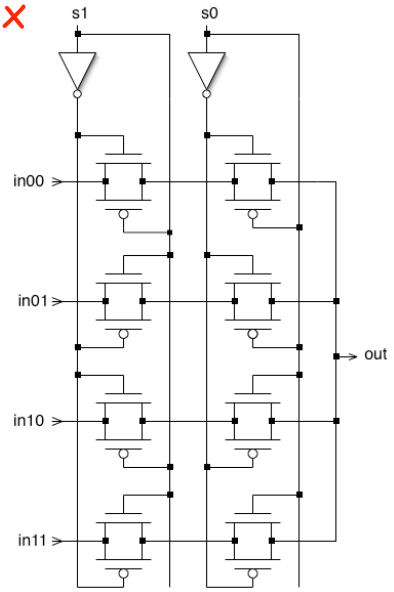

Alternative 4-to-1 Multiplexer

- This version has less delay from in to out
- Care must be taken to avoid turning on multiple paths simultaneously (shorting together the inputs)

36 Transistors

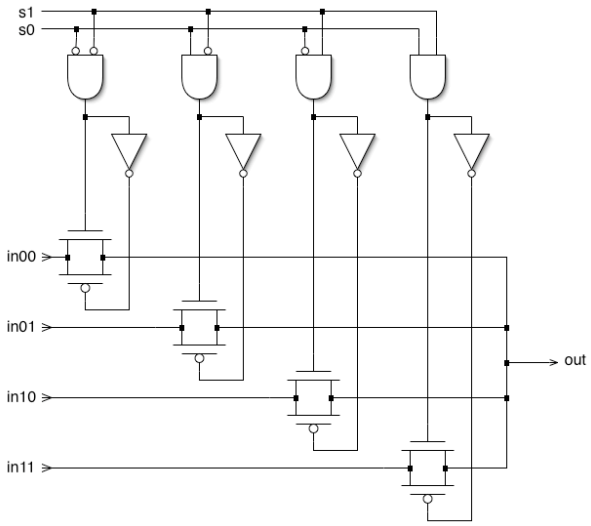

Tri-state Buffers

Tri-state Buffer:

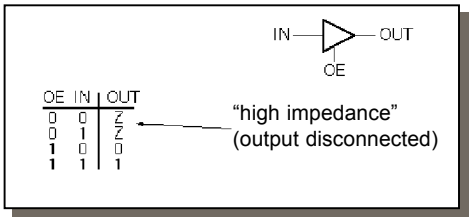

- Transistor circuit for inverting tri-state buffer:

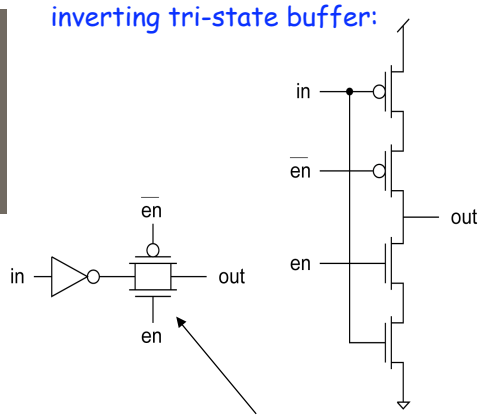

"transmission gate"

- Variations

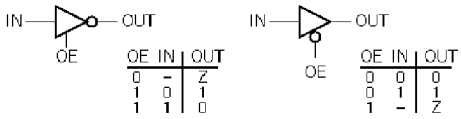

Inverting buffer

Inverted enable

Tri-state Buffers

Tri-state buffers are used when multiple circuits all connect to a common bus. Only one circuit at a time is allowed to drive the bus. All others "disconnect".

- Bidirectional connections:

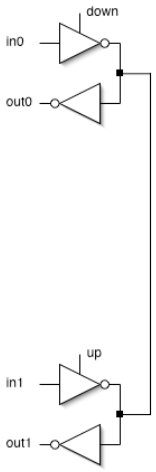

- Busses:

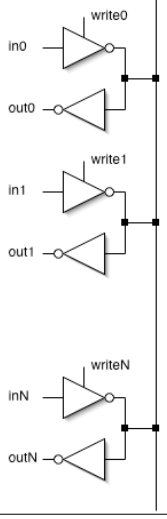

Tri-state Based Multiplexer

- Multiplexer

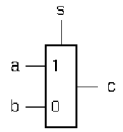

If s=1 then c=a else c=b

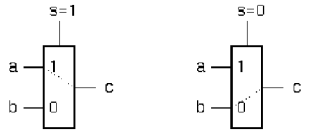

- Transistor Circuit for inverting multiplexer:

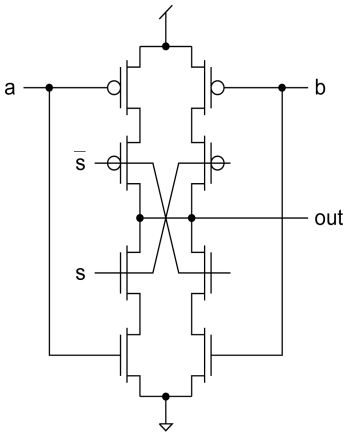

D-type Edge-triggered Flip-flop

- The edge of the clock is used to *sample* the "D" input & send it to "Q" (positive edge triggering)
  - At all other times the output Q is independent of the input D (just stores previously sampled value)
  - The input must be stable for a short time before the clock edge.

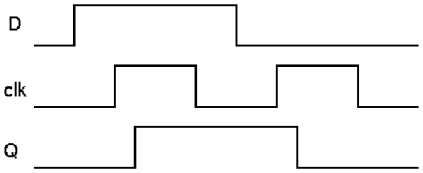

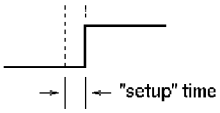

Transistor-level Logic Circuits

Positive Level-sensitive ***latch***:

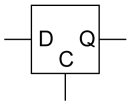

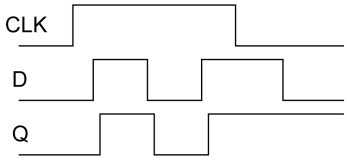

Latch Transistor Level:

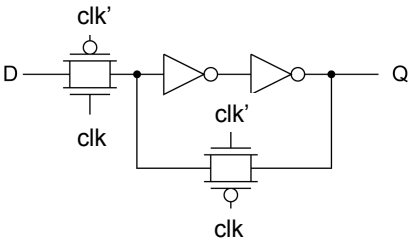

Positive Edge-triggered flip-flop built from two level-sensitive latches:

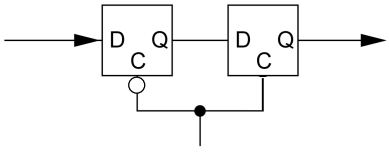

State Machines in CMOS

- Two Phase Non-Overlapping Clocking