Fall 2009

EE40 Homework #11

Due Dec 3 (Thursday), 12:00 noon in Cory 240

This is the last homework assignment for this semester.

Reading Assignments

Chapter 11 of Hambley

Chapter 14.8 of Hambley

Problem 1: Power Gain (Hambley P11.16)

A certain amplifier has zero output resistance, and a voltage gain of only 0.1. However, the power gain is 10. How is this possible? What is the value of the current gain? How does the load resistance compare with the input resistance of the amplifier?

Problem 2: Cascade Amplifiers (Hambley P11.19)

Given the amplifiers having the characteristics shown in the table below, find the input impedance, output impedance, and open-circuit voltage gain of the following cascades:

a) The cascade amplifier *A*-*B*.

b) The cascade amplifier *B*-*A*.

Amplifier	Open-circuit voltage gain	Input resistance	Output resistance
A	100	3 kΩ	400 Ω
B	500	1 MΩ	2 kΩ

Problem 3: Efficiency (Hambley P11.28)

Under high-signal test conditions, a certain audio amplifier supplies a 24-V rms 1-kHz sinusoidal voltage to an 8-Ω load. The power supply delivers 4 A at a voltage of 50 V to the amplifier. The signal power supplied by the input source is negligible. Determine the efficiency and the power dissipated in the amplifier.

Problem 4: Model Conversion (Hambley P11.38)

Consider the amplifiers having the characteristics shown in the table below.

Amplifier	Gain	Input resistance	Output resistance
A	Open-circuit transresistance: 100 MΩ	1 MΩ	200 Ω
B	Short-circuit current gain: 100	50 Ω	500 kΩ

Find the voltage-amplifier model for the cascade of *A* followed by *B*. Then determine the corresponding transconductance amplifier model.

Problem 5: Frequency Response (Hambley P11.71)

Consider the figure below, in which block *A* is an ideal transconductance amplifier and block *B* is an ideal voltage amplifier. The capacitance is initially uncharged.

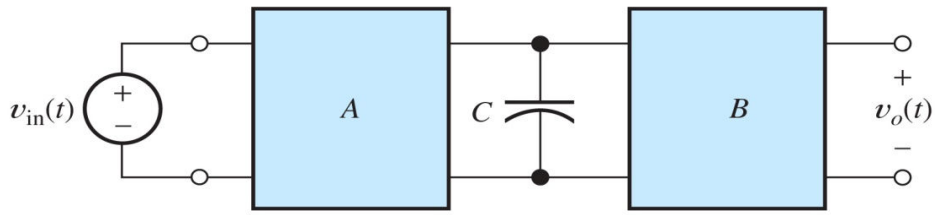

a) Derive an expression for $v_o(t)$ for $t \geq 0$, in terms of the amplifier gains, $v_{in}(t)$, and the capacitance C.

b) Derive an expression for the overall voltage gain of the system as a function of frequency. (*Hint*: Assume that $v_{in}(t) = V_m\cos(\omega t)$ or $V_m\exp(j\omega t)$, determine the expression for $v_o(t)$, and then determine the complex voltage gain by taking the ratio of the phasors for the input and output.)

c) Given the parameters below, sketch Bode plots of the voltage-gain magnitude and phase, to scale, for the range from f = 1 Hz to 1 kHz.

G_{msc} = 1 μS, A_{voc} = 200π, C = 1 μF

Problem 6: Distortion (Hambley P11.76)

The output of an amplifier used to create special effects for audio signals is given by:

$$V_o(t) = v_{in}(t) + K\, v_{in}(t - t_d)$$

in which K and t_d are constants.

a) Is this amplifier linear? Explain carefully.

b) Determine the complex voltage gain as a function of frequency. (*Hint*: Assume that $v_{in}(t) = V_m\cos(2\pi ft)$ or $V_m\exp(j2\pi ft)$, determine the corresponding output, and divide the phaseor output by the phasor input.)

c) Given K = 0.5 and t_d = 1 ms, use a computer to plot the gain magnitude and phase versus frequency for $0 \leq f \leq 10$ kHz. Use linear scales.

d) Does this amplifier produce amplitude distortion? Phase distortion? Explain carefully.

Problem 7: CMMR (Hambley P11.94)

In a certain instrumentation amplifier, the input signal consists of a 20-mV rms differential signal and a 5-V rms 60-Hz interfering common-mode signal. It is desired that the common-mode contribution to the output signal be at least 60 dB lower than the contribution from the differential signal. What is the minimum CMRR allowed for the amplifier, in decibels?

Problem 8: Offset Voltage and Current, and Bias Current (Hambley P11.101)

The figure below shows a differential amplifier, including sources to model its DC imperfections, under three different test conditions. The amplifier has a differential voltage gain of 100, a common-mode voltage gain of zero, and infinite input impedance. Determine the values of V_{off}, I_B, and I_{off}.

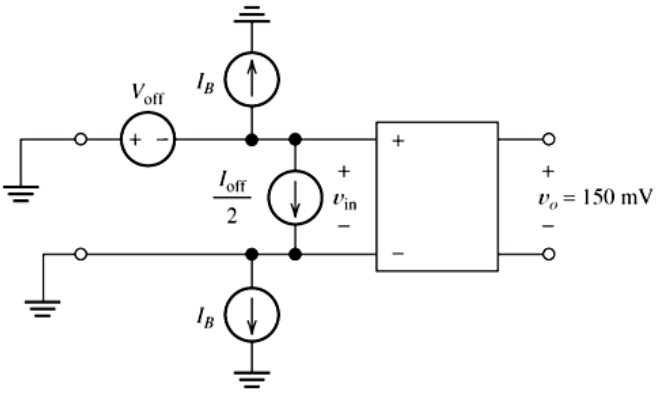
V_{off}
I_B
$\frac{I_{off}}{2}$
+
v_{in}
−
+
−
+
v_o = 150 mV
−
I_B

(a)

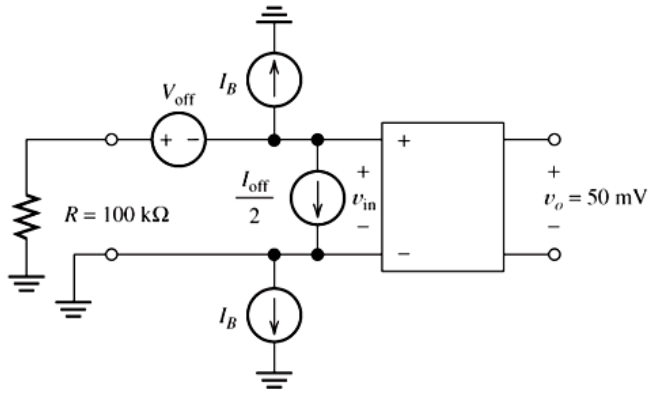
V_{off}
I_B
$\frac{I_{off}}{2}$
+
v_{in}
−
+
−
+
v_o = 50 mV
−
R = 100 kΩ
I_B

(b)

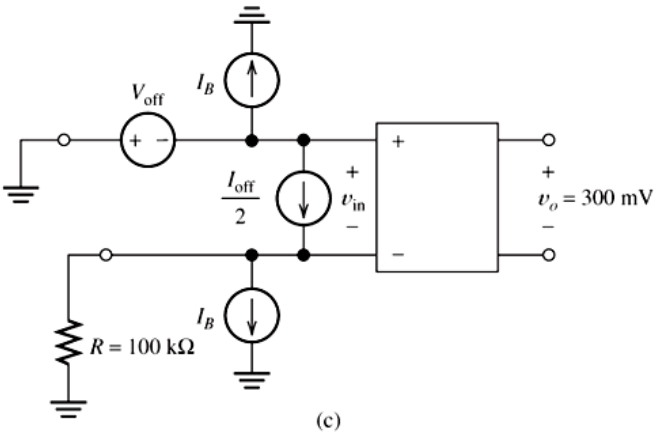
V_{off}
I_B
$\frac{I_{off}}{2}$
+
v_{in}
−
+
−
+
v_o = 300 mV
−
I_B
R = 100 kΩ

(c)