Fall 2009

EE40 Homework #10

Due Nov 19 (Thursday), 12:00 noon in Cory 240

Reading Assignments

Chapter 12 of Hambley
Supplement Reading on MOS Circuits
http://www.inst.eecs.berkeley.edu/~ee40/fa09/handouts/EE40_MOS_Circuit.pdf

Problem 1: Region of Operation (Hambley P12.8)

Determine the region of operation for each of the enhancement transistors and the currents shown in figure 1 below. The transistors have $|V_{t0}|$=1V, K=0.1mA/V^2

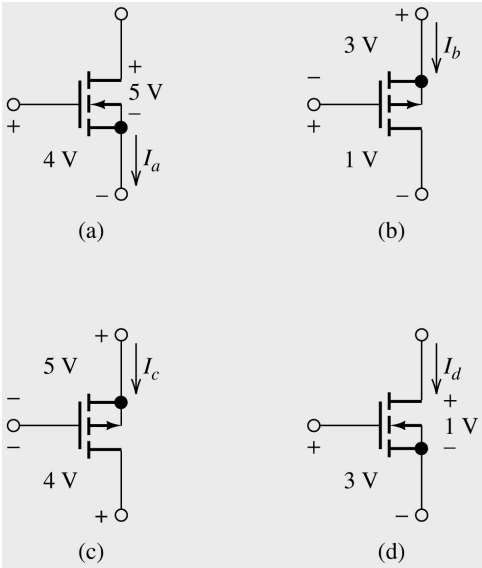

Fig.1 Transistor schematics for Problem 1

Problem 2 Find transistor current (Hambley P12.14)

Given that the enhancement transistor shown in figure 2 below has V_{t0}=1V, K=0.5mA/V^2 find the value of the resistance R.

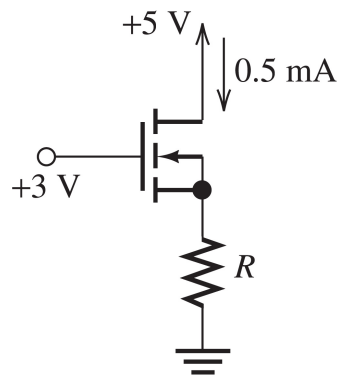

Fig.2 Transistor schematic for problem 2

Problem 3 Load Line Analysis (Hambley P12.20)

Consider the amplifier shown in figure 3

a. Find Vgs(5) assuming the coupling capacitor is a short circuit at the signal frequency, but an open at DC.(Hint:Apply the superposition principle for AC and DC sources)
b. If the FET has V_{t0}=1V, K=0.5mA/V^2 sketch its drain characteristics to scale for Vgs={1,2,3,4} V
c. Draw the load line for the amplifier on the characteristics
d. find the values of Vds_q, Vds_{min} Vds_{max}

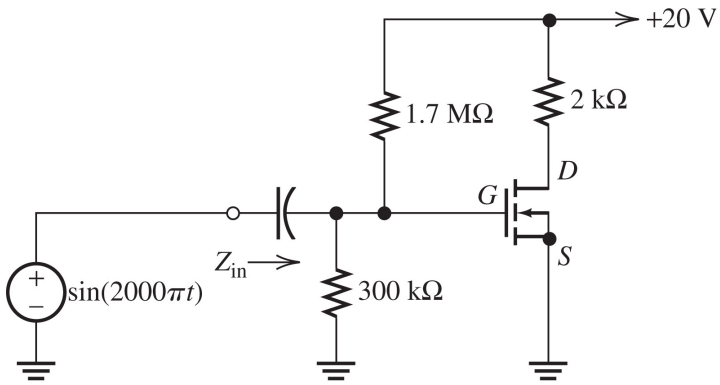

`Fig. 3: Amplifier for problem 3

Problem 4 Bias Circuit (Hambley P12.31)

a. Find the value of Id_q for the circuit in Figure 4. Assume V_{t0}=4V, K=1mA/V^2
b. Repeat for Assume V_{t0}=2V, K=2mA/V^2

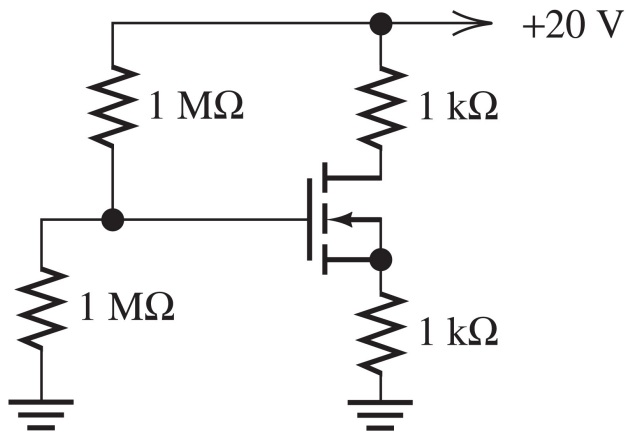

Fig. 4 Schematic for Problem 4

Problem 5 W/L Ratio (Hambley P12.35)

Both transistors shown in figure 5 have kp= 100uA/V^2 and V_{t0}=0.5V. Determine the value of R needed so that i_{D1}=0.2mA. For what range of Vx is the second transistor operating in the saturation region? What is the value of i_{D2}. Provided that Vx is large enough that the second transistor operates in saturation, to what ideal circuit element is the transistor equivalent?

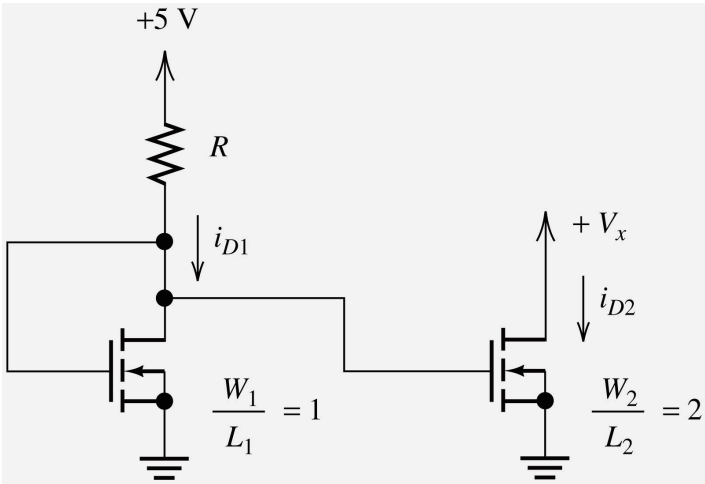

Fig.5 Schematic for problem 5

Problem 6 Small Signal Model Parameters (Hambley 12.42)
A certain NMOS transistor has the characteristic shown in figure 6. Graphically determine the value of gm and R_{ds} at the operating point defined by Vds_Q=6V and Vgs_Q=2.5V.

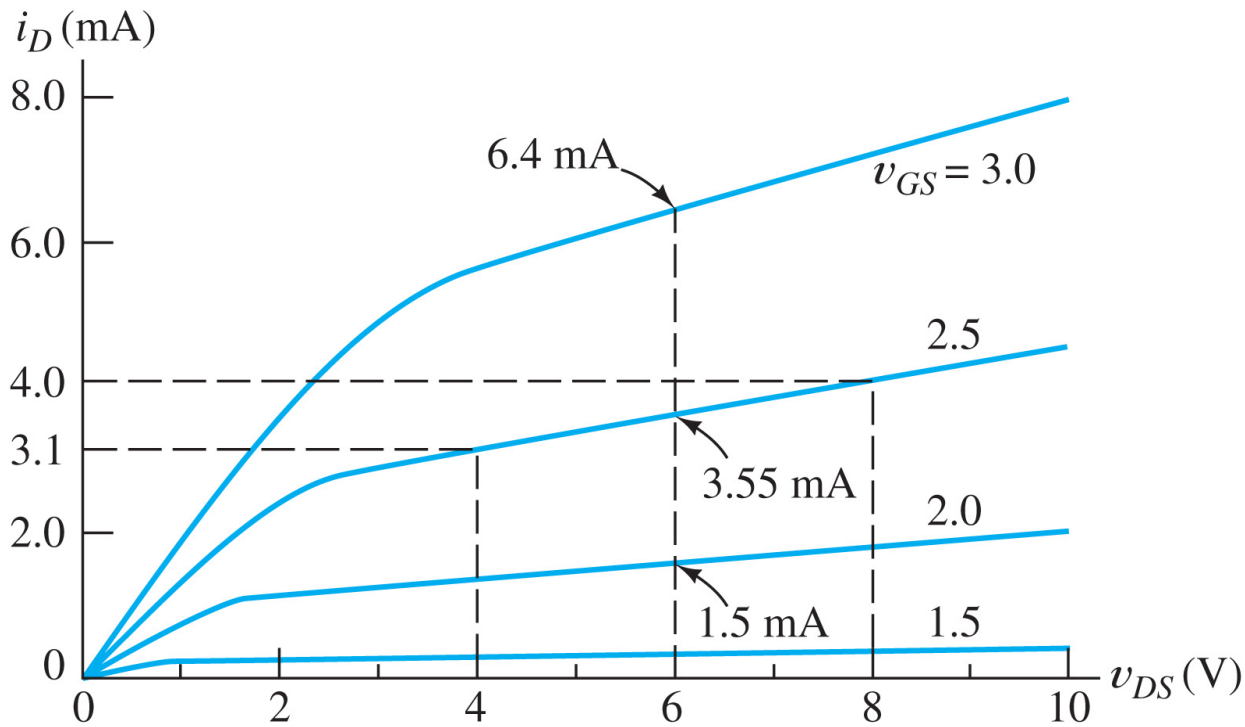

Fig.6 MOS Characteristic for problem 6

Problem 7 Common Source Amplifier (count as two problems for score) (Hambley P12.52)
Consider the amplifier in Fig. 7

a. Draw the small signal equivalent circuit assuming the capacitors C_1 and C_2 are short circuits for the signal
b. Assume that Rd is infinite and derive expressions for the voltage gain, and input and output resistance.
c. Find Id_q if R=100K Ohm, R_f=100K Ohm, R_d=3K Ohm and R_L=10K Ohm, Vdd=20V V_{t0}=5V, K=1mA/V_2 Determine the value of gm at the Q point.
d. Evaluate the expressions found in part b by using the values given in part c.
e. Find $v_o(t)$ if v(t)=0.2 sin(2000 pi t)
f. Is this amplifier inverting or non-inverting

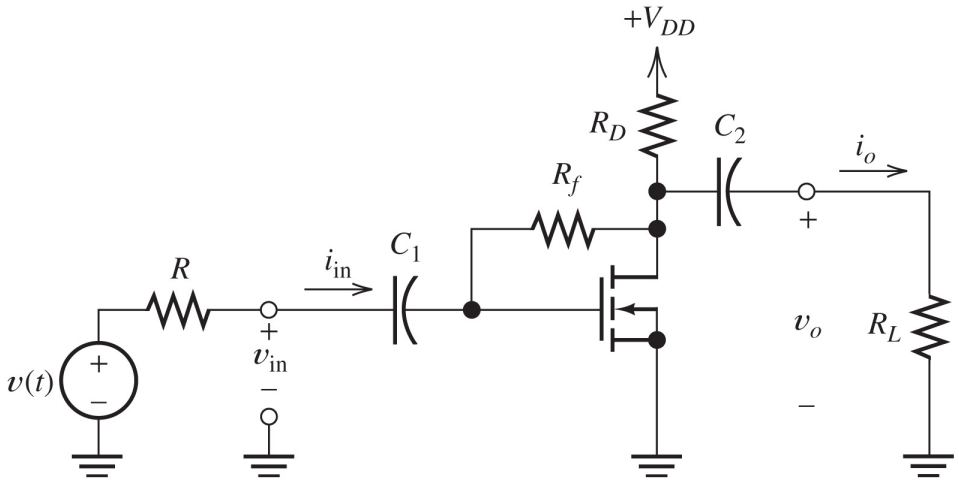

Fig.7 Amplifier for Problem 7

Problem 8 Source Follower (Hambley P 12.55)

Consider the common-source amplifier and the source follower. Which amplifier would be used if a voltage gain magnitude larger then unity was needed? Which one would be used to obtain a low output resistance?

Problem 9 CMOS Logic Gates (Hambley P12.60)

a. Draw the circuit of a 3-input CMOS nand-gates
b. Draw its equivalent circuit (open and closed switches) if all three inputs are high (logic “1”)
c. Repeat if all three inputs are low.