**Fall 2009**

# EE40 Homework #6

## Due Oct 15 (Thursday), 12:00 noon in Cory 240

## Reading Assignments

Chapter 5 of Hambley textbook. Section 5.7 on Three-Phase circuit is optional
Sections 6.1-6.5 of Hambley textbook

### Problem 1: Power Calculation

## Hambley P5.72

The voltage across a load is v(t)=$10^4$ sqrt(2)cos(wt+$10^0$) and the current through the load is i(t)=20sqrt(2) cos(wt-$20^0$). A. The reference direction for the current points into the positive reference for the voltage. Determine the power factor, the power, and the apparent power for the load. Is this load inductive or capacitive?

### Problem 2 : Phasor Equivalent Circuits (Hambley 5.91)

Draw the Thevenin and Norton equivalent circuits for the figure below,labeling elements and terminals

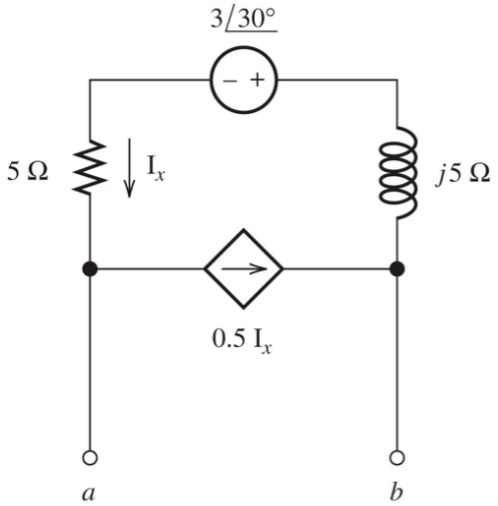

## Problem 3 Maximum power transfer (Hambley 5.93)

The Thevenin equivalent of a two terminal network is shown below. The frequency is f=60Hz. We wish to connect a load across temrinals a-b that consists of a resistance and a capacitance in series such that the power delivered to the resistance is maximized. Find the value of the resistance and the value of the capacitance.

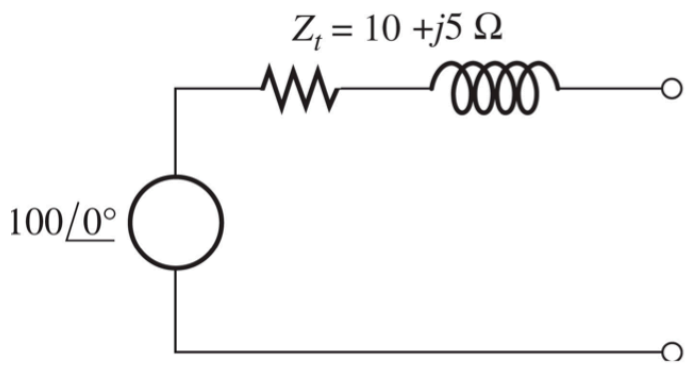




## Problem 4 Simple Transfer Function Calculation (Hambley 6.15)

The figure below shows the input and output voltage of a certain filter operating in steady state with a sinusoidal input. Determine the frequency and the corresponding value of the transfer function.

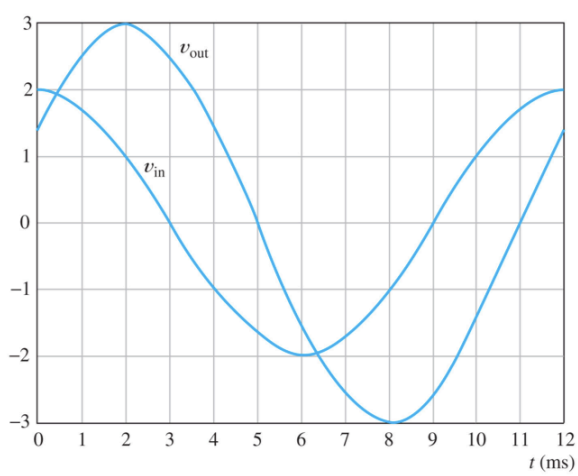

**Problem 5 Transfer Function of a differentiator (*Hambley P.6.18)***

Consider a circuit for which the output voltage is the time derivative of the input voltage as illustrated in figure below.The input voltage is given by $v_{in}(t)=V_{max}\cos(2\ pi\ \ f\ t)$.

Find an expression for the output voltage as a function of time. Find an expression for the transfer function of the differentiator. Plot the magnitude and phase of the transfer function versus frequency.

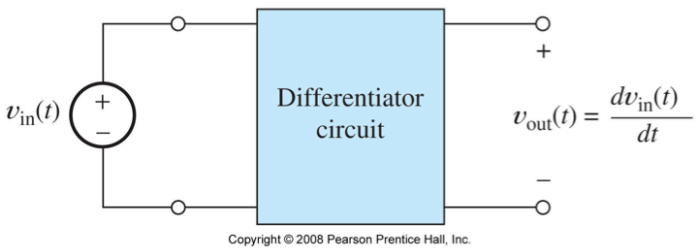


**Problem 6 db and log frequency practice**

***(a) Hambley P.6.41*** What frequency is halfway between 100 and 3000Hz on a logarithmic scale? And on a linear scale?

***(b) Hambley P6.42*** What is the decibel equivalent for $|H(f)|=0.5$ ? Repeat for $|H(f)|=2$, $|H(f)|=2^{-1/2}=0.7071$, $|H(f)|=2^{+1/2}=1.4142$

***(c) Hambley P6.43*** What frequency is one octave higher than 500Hz ? Three octaves lower ? Two decades higher? One decade lower?

**Problem 7 Bode Plot of circuits**
***Hambley P.6.60***
Solve for the transfer function H(f)= $\mathbf{V_{out}/V_{in}}$ and draw the asymptotic Bode magnitude and phase plots for the circuit shown in figure below.

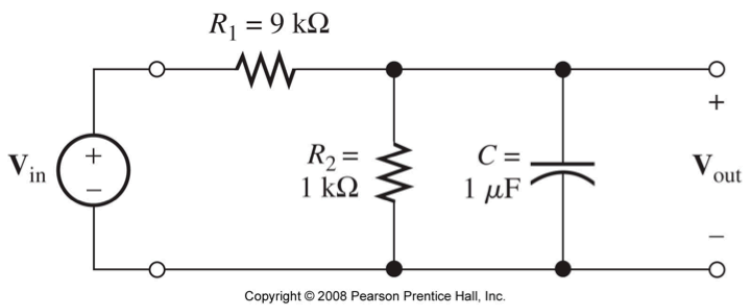


**Problem 8 Low Pass Filter**
***Hambley P.6.63***
Consider the circuit shown in figure below. Sketch the asymptotic Bode magnitude and phase plot to scale for the transfer function H(f)= $\mathbf{V_{out}}$(f)/$\mathbf{V_{in}}$ (f).

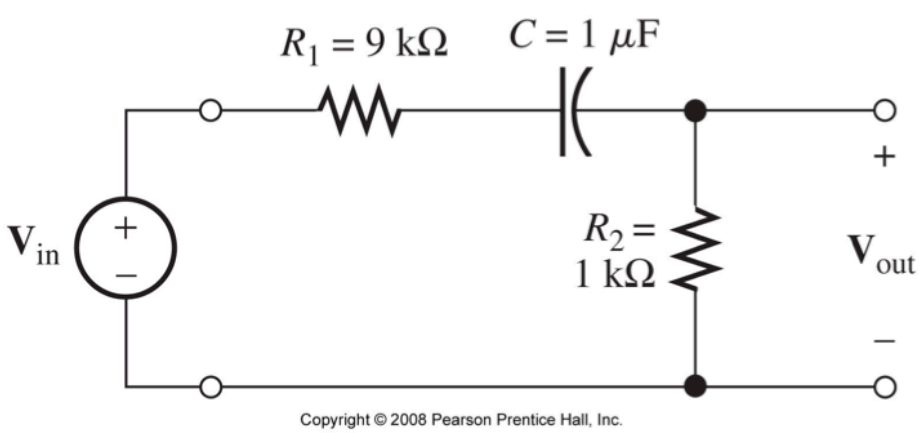

**Problem 9  High Pass Filter**

***Hambley P.6.67***

Consider the circuit shown in figure below. Sketch the asymptotic Bode magnitude and phase plot to scale for the transfer function H(f)= $\mathbf{V_{out}}$(f)/$\mathbf{V_{in}}$ (f).