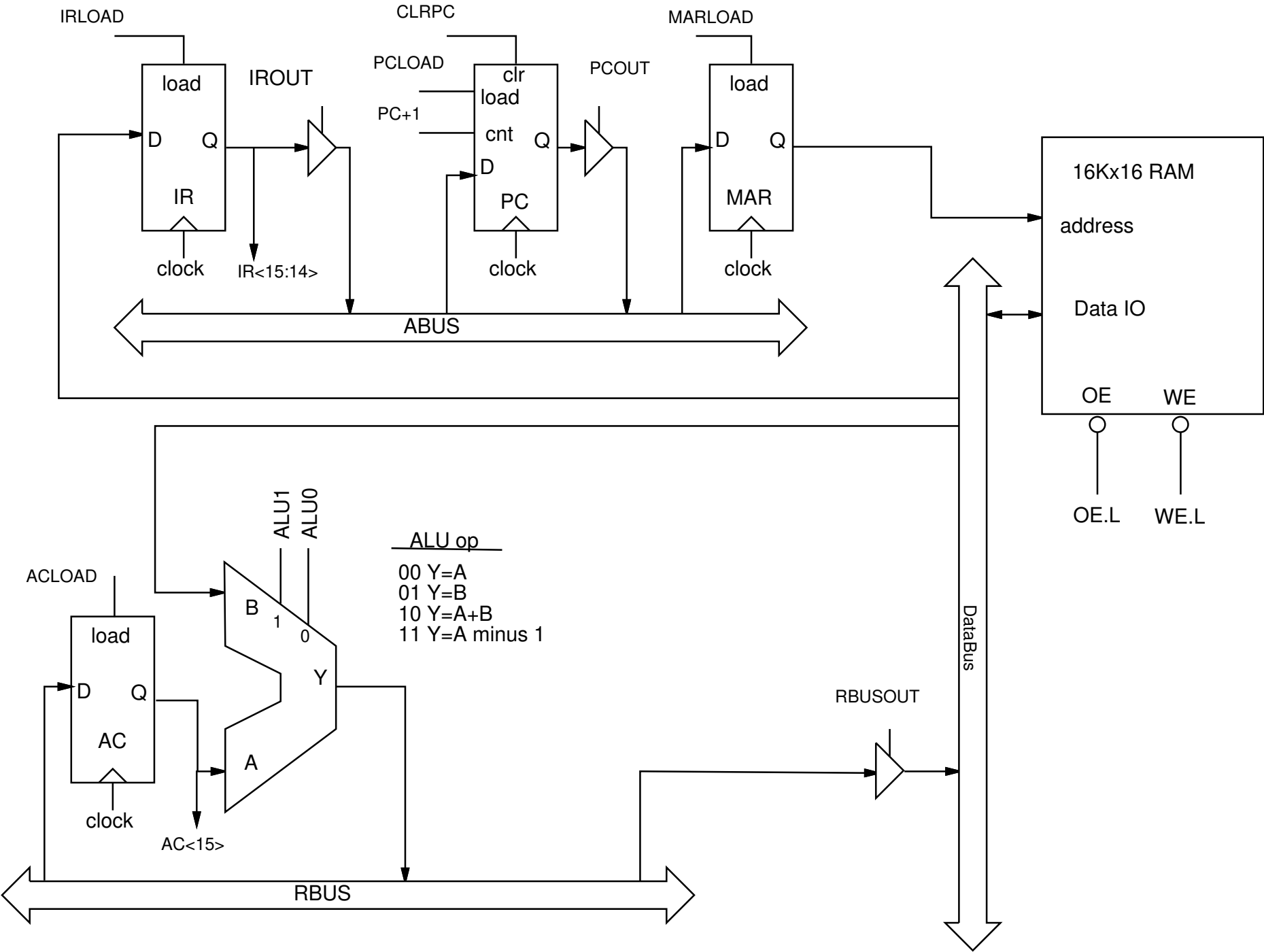
IRLOAD
load
D
Q
IR
clock
IROUT
IR<15:14>
CLRPC
PCLOAD
clr
load
PC+1
cnt
Q
D
PC
clock
PCOUT
MARLOAD
load
D
Q
MAR
clock
ABUS
16Kx16 RAM
address
Data IO
OE
WE
OE.L
WE.L
DataBus
ALU1
ALU0
ALU op
00 Y=A
01 Y=B
10 Y=A+B
11 Y=A minus 1
ACLOAD
load
D
Q
AC
clock
AC<15>
B
1
0
Y
A
RBUSOUT
RBUS