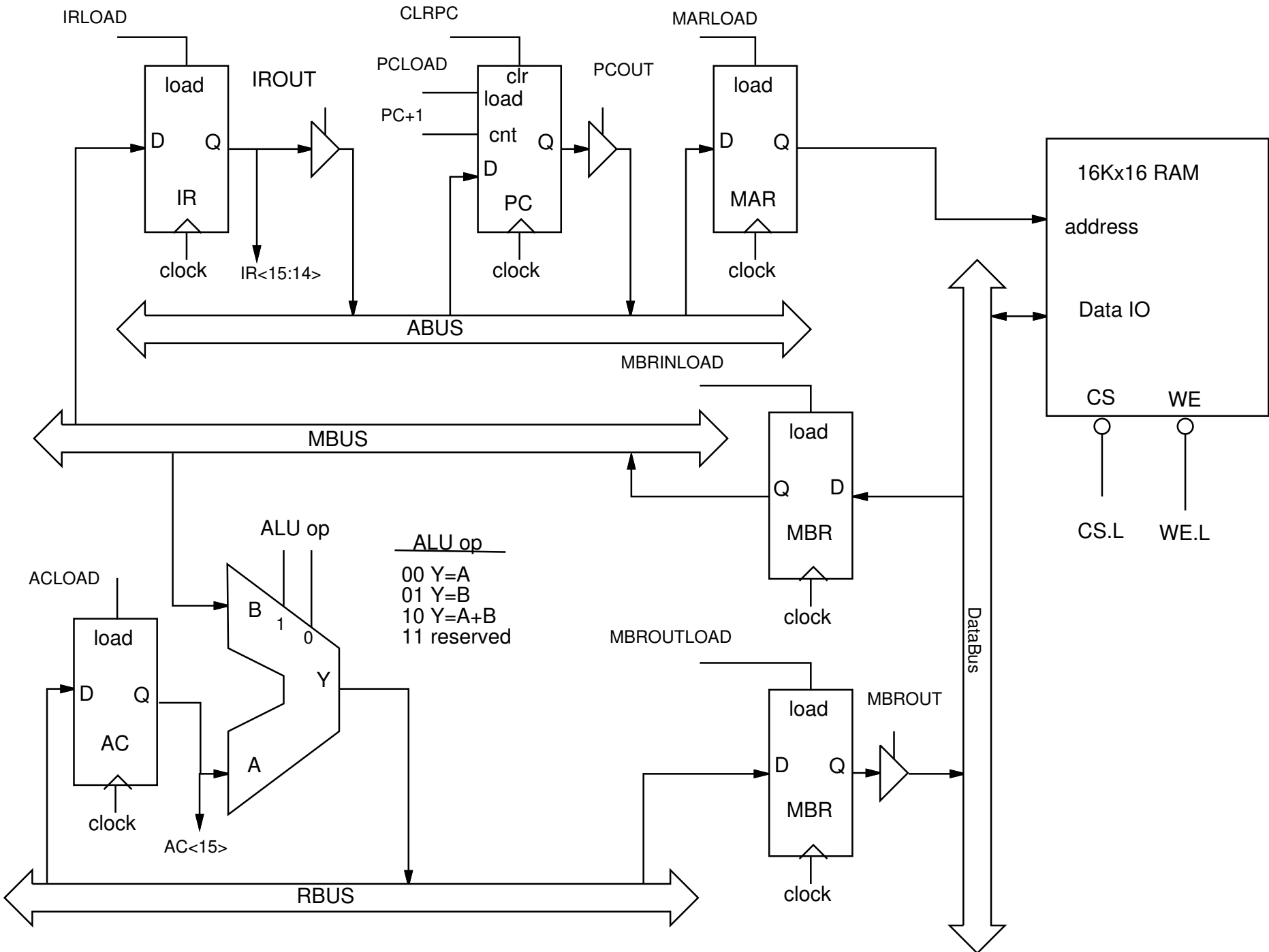Computer from Katz Fig. 11.13