2. Katz Ch. 11, Problem 7.

a. Design single bus datapath

Datapath information:

Components:

Single accumulator (R0), rotating shifter (R1), two general purpose registers (R3, R2)

Instructions: (R1 & R0 can also be used as general purpose registers.)

COMP, INC, RSR, ASR, ADD, AND

Datapath style:

Single bus

Other components that aren't used in this problem are drawn in in dotted lines. Tristate buffers are all BUFEs.

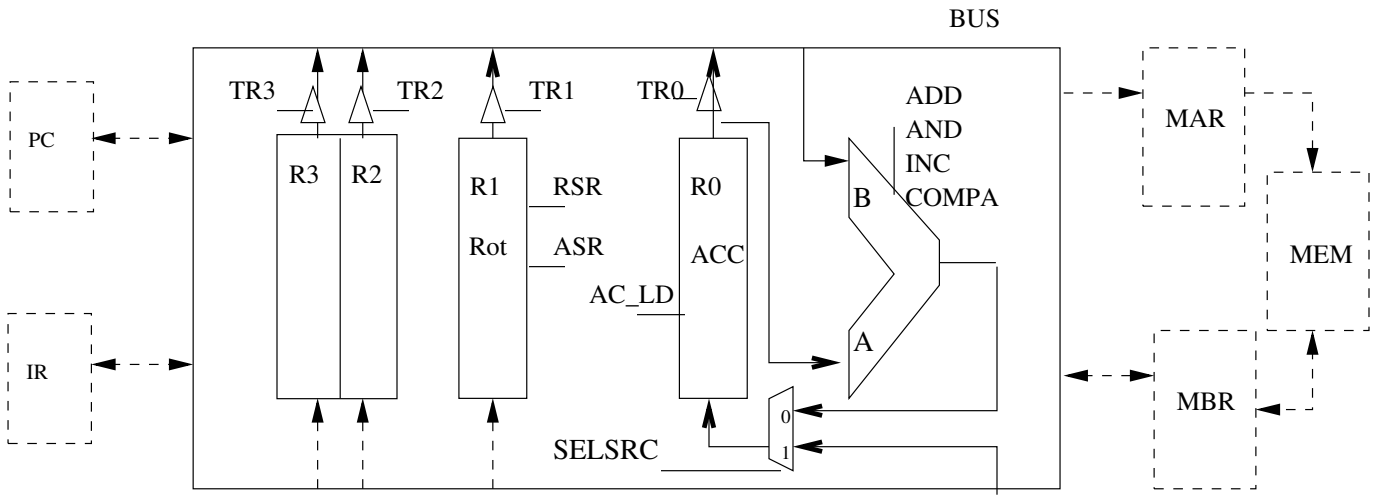

2. b. RTN and micro-operations for single bus datapath for specified instructions.

	RTN	Micro-instructions	Signals
ADD	ACC + Rx1x0 -> ACC	Rx1x0 -> BUS	TRx1x0 = 1
		(Bus Always goes to ALU so no instruction necessary to get BUS to ALU)	
		(ACC Always goes to ALU so no instruction necessary to get ACC to ALU)	
		ACC + BUS -> ALUOUT	ADD
		ALUOUT -> ACC	SELSRC = 0, AC_LD
AND	ACC AND Rx1x0 -> ACC	Rx1x0 -> BUS	TRx1x0 = 1
		(Bus Always goes to ALU so no instruction necessary to get BUS to ALU)	
		(ACC Always goes to ALU so no instruction necessary to get ACC to ALU)	
		ACC AND BUS -> ALUOUT	AND
		ALUOUT -> ACC	SELSRC = 0, AC_LD
COMP	~ACC -> ACC	(ACC Always goes to ALU so no instruction necessary to get ACC to ALU)	
		~ACC -> ALUOUT	COMPA
		ALUOUT -> ACC	SELSRC = 0, AC_LD
INC	ACC + 1 -> ACC	(ACC Always goes to ALU so no instruction necessary to get ACC to ALU)	
		ACC + 1 -> ALUOUT	INC
		ALUOUT -> ACC	SELSRC = 0, AC_LD
RSR	RSR(R1) -> R1	RSR	RSR
ASR	ASR(R1) -> R1	ASR	ASR