Store Execution Sequence

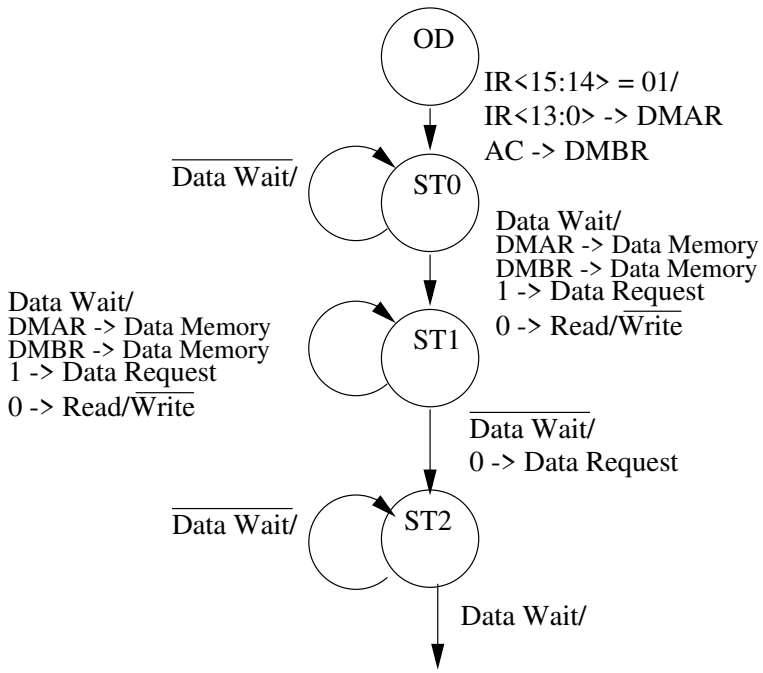

Add Execution Sequence

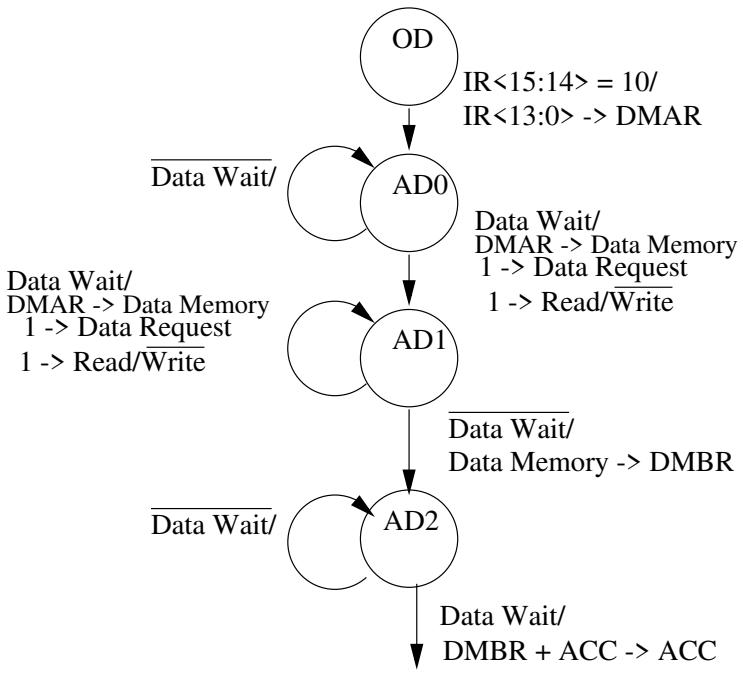

There's no change in the Branch execution cycle.
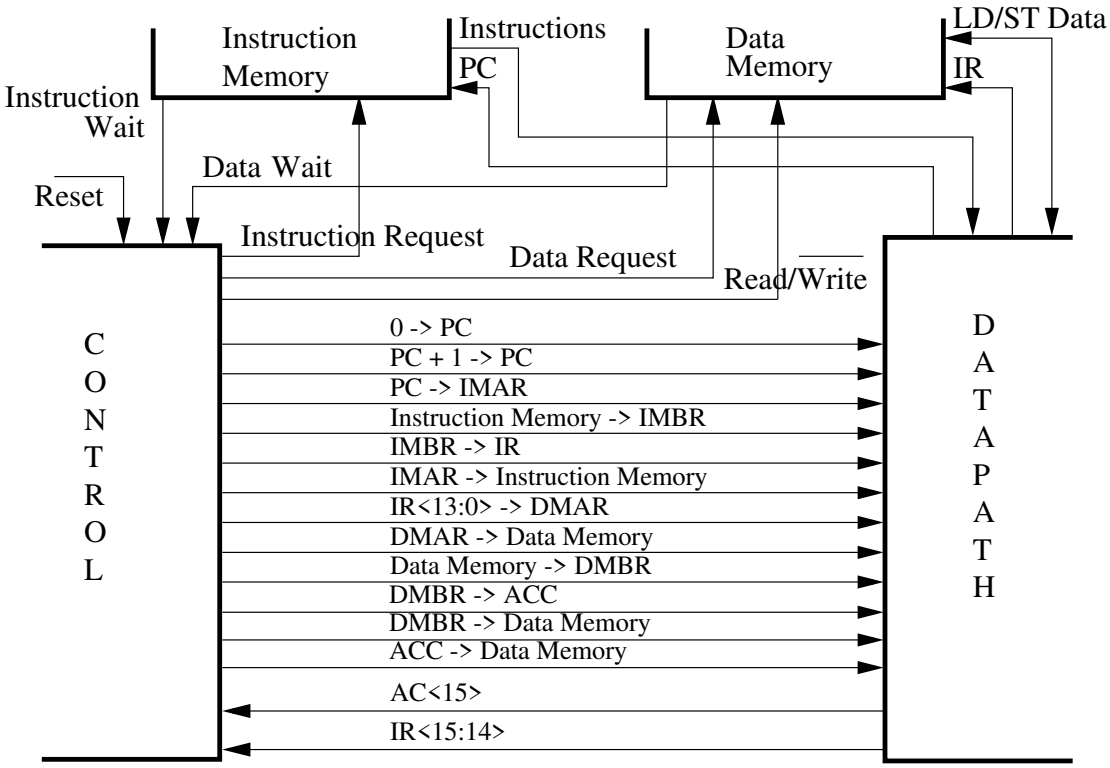
1. c. How would the control signal flow change for the Harvard architecture?